VOZWEI

# VW3 Series of Air Circuit Breaker

## Product Specification

V1.6 2025

# Contents


Overview Of Circuit Breaker ..... 1

Normal Operation, Installation and Transportation Conditions ..... 2

Model Explanation and Encoding Rules ..... 3

Brief Introduction of Circuit Breaker's Structure ..... 5

Installation of Circuit Breaker ..... 7

Accessories Installation of Circuit Breaker ..... 10

Operation ..... 19

Operation and Protection Features of the Controller ..... 22

Size and Connection ..... 43

Electrical Wiring Diagram ..... 63

Installation and Maintenance ..... 67

Ordering Notes ..... 69

## Usage and Applicability

VW3 series circuit breaker for wind and photovoltaic power generation is a kind of new breaker with high performance, ( it's named breaker for short hereinafter). It is safety and reliable, with sophisticated technology, complete functions, suitable for AC 50Hz, rated voltage 1500V and under, the rated working current 6300A and under in the combined substation, wind farm host tower, and it's used to prohibit circuit and power supply equipment from overload, under-voltage, short-circuit, ground fault, current imbalance. Circuit breaker adopts the controller with precise selective protection and multi-function. Configure leakage transformer and corresponding controller can achieve leakage protection. VWC6 controller with communication interface, easy to connect with the field bus, to achieve "telemetry", "remote adjustment", "remote control", "remote communication" four remote functions to meet the requirements of automation control.

Our products have obtained 3C certificate.

Our products can be run in low-temperature environment of -40 °C by low-temperature test.

It has insulation function, the symbol is " "

- Tailored for solar energy, wind power and energy storage systems
- High-voltage air circuit breaker, optional 800Vac, 1140Vac, 1250Vac, 1500Vac
- With ultra-high breaking capacity, max meet 80KA at 800Vac
- With excellent anti damp heat and dew solidification capabilities
- Strong ability to adapt to alternating changes in high and low temperatures
- Strong resistance to salt spray and humid environments
- High altitude adaptability, still safe working at an altitude of 5000 meters
- Can be used in complex mixed gas environments (Cl2, SO2, NO2, H2S)
- Low energy consumption and temperature rise of the product itself
- Integrated communication network, capable of remote control, telemetry, remote signaling, and remote adjustment

## Criterion of Circuit Breaker

| | |
|---|---|
| ■ IEC 60947-1 and GB 14048.1 | Low voltage switchgear and controlgear-General rules |
| ■ IEC 60947-2 and GB 14048.2 | Low voltage switchgear and controlgear-Low voltage circuit breaker |
| ■ GB/T 14597 | Low voltage switchgear and controlgear-Contactor and motor starter |
| ■ IEC 60947-4-1 and GB 14048.4 | Environmental climatic cinditions appearing in different higher lands for electrical products |
| ■ GB2423.1 | Environmental testing of electrical |
| ■ GB/T20626.1 | Specific environmental condition-Electric and electronic products for plateau<br>Part 1:General technical requirements |

## Normal Operation, Installation and Transportation Conditions

- Recommended ambient air temperature limit is -40℃~+70℃, it can reach to +70℃ in a short time (within 24h).
- The altitude of the installation location is less than 5000m.
- Relative humidity: not exceed 50% at the maximum ambient temperature of +40℃, but higher relative humidity at the lower temperature, for example,90% at 20℃. Special measures should be taken considering the dews on product surface due to temperature change.
- Pollution grade 3.
- The circuit breaker installed in the interior with the door frame, the protection level of IP40.
- IV for main circuit and under-voltage release coil and power supply transformer primary coil; III for other auxiliary and control circuits.
- The vertical gradient: no more than 5°.
- Transportation and storage conditions:-40~+75℃.

# Model Explanation and Encoding Rules

| VW3 | - | □ | □ | / | □ | □ | / | □ | / | □ | □ | / | □ | □ | □ | □ | □ | □ | □ | / | □ | / | □ | / | □ |
|---|---|---|---|---|---|---|---|---|---|---|---|---|---|---|---|---|---|---|---|---|---|---|---|---|---|
| 1 | | 2 | 3 | | 4 | 5 | | 6 | | 7 | 8 | | 9 | 10 | 11 | 12 | 13 | 14 | 15 | | 16 | | 17 | | 18 | | 19 |

| SN | Name | Specification, type code | | Description |
|---|---|---|---|---|
| 1 | Design code | VW3: Design code | | |
| 2 | Frame rating | 20: 2000A; 25:2500A; 40: 4000A; 63: 6300A | | |
| 3 | Breaking type | S: Standard breaking level; H: High breaking level;<br>HU: High voltage level; HV: Ultra high voltage level | | S is only used for VW3-20; |
| 4 | Rated current | 02: 200A; 04: 400A; 06: 630A; 08: 800A; 10: 1000A; 12: 1250A;<br>16: 1600A; 20: 2000A; 25: 2500A; 29: 2900A; 32: 3200A<br>36: 3600A; 40: 4000A; 50: 5000A; 63: 6300A | | |
| 5 | Installation mode | F: Fixed type; D: Drawout type | | |
| 6 | Number of poles | 3: 3P; 4: 4P; 5: 3P+N | | 3P+N: 3P products are added with N-phase external transformers; |
| 7 | Controller | VWC2(DIP switch); VWC4 (digital screen); VWC6 (LCD) | | VWC2 is only used for VW3-20; |
| 8 | Controller optional function | Protection type | Empty: Conventional type; V: Voltage measurement; P: Harmonic measurement and protection | 1.VWC4 controller only has S1-4DO;<br>2. Choose one from the communication functions of "H", "MP", "MD";<br>3. VWC2 does not have remote reset function;<br>4.Only VWC6 has communication function; |
| | | Communication function | H: Modbus protocol; MP: Profibus-DP protocol; MD: Devicenet protocol | |
| | | Signal unit | S1: 4DO; S2: 3DO+1DI; S3:2DO+2DI | |
| | | Remote reset function | Z2: AC230V | |
| | | Grounding mode | T: Differential type<br>W: Ground current type<br>Note: 3P+N needs to be added with an external transformer | |
| | | External N-phase transformer | N1; N2; N3; N4 | |
| | | Protection form of current leakage: E-type (including the external current leakage transformer) | | |
| | | Contact wear equivalent: J | | |
| 9 | Electric energy storage mechanism | D1:AC400V; D2:AC230V/DC220V; D4: AC/DC110V; D5:DC24V | | |
| 10 | Shunt release | F1:AC400V; F2:AC230V/DC220V; F4: AC/DC110V; F5:DC24V | | |
| 11 | Closed electromagnet | B1:AC400V; B2:AC230V/DC220V; B4: AC/DC110V; B5:DC24V | | |
| 12 | Under-voltage release / Loss of voltage release / Voltage-check release | Under-voltage release | Q1: AC400V; Q2: AC230V; Q5: DC24V | 1. Choose one from the Under-voltage release, Loss of voltage release, Voltage-check release; |
| | | Loss of voltage release | S1: AC400V; S2: AC230V | |
| | | Voltage-check release | J1: AC400V; J2: AC230V | |
| 13 | Under-voltage release / loss of voltage release Delay time | 0: Instantaneous; 1: 1s delay; 3: 3s delay; 5: 5s delay | | |
| 14 | Auxiliary contact | A33: 3NO3NC; A44: 4NO4NC; ... ; A1414: 14NO14NC | | |
| | | A3: Three-group switching; A4: Four-group switching; ... ; A14: Fourteen-group switching; | | |

| SN | Name | Specification, type code | Description |
|---|---|---|---|
| 15 | Internal Accessories | BX: Closing ready signal output unit | |
| | | JS: Counter functional unit | |
| | | CM1: Drawout type (with the right side of the door interlock); | |
| | | CX: Drawer seat three-position signal output | |
| 16 | External accessories | M: Doorframe<br>Note: standard | |
| | | R: Relay module | |
| | | Power supply module AC65~500V, DC80~700V Note: standard | |
| | | S: Button lock | |
| | | P2: Voltage conversion module | |
| 17 | Wiring mode | C1: Horizontal wiring, C2: Vertical wiring. C3: Forward wiring;<br>C4: Mixed wiring (upper horizontal, lower vertical);<br>C5: Mixed wiring (upper vertical, lower horizontal);<br>C6: Mixed wiring (upper forward, lower horizontal);<br>C7: Mixed wiring (upper horizontal, lower forward);<br>C8: Mixed wiring (upper vertical, lower forward);<br>C9: Mixed wiring (upper forward, lower vertical) | |
| | | 1: Standard wiring, 2: Extended wiring | |
| 18 | Rated working voltage | KV1: AC400/415V; KV2:AC500/550V; KV3: AC660/690V;<br>KV4: AC800V; KV6: AC1140V; KV7: AC1250V; KV8: AC1500V | |
| 19 | Language type | Empty: Chinese; Y: English | |

## Interlocking Piece Model Explanation and Encoding Rules

| | | |
|---|---|---|
| Key lock | SF11: Key lock device (one lock and one key);<br>SF21: Key lock device (two locks and one key);<br>SF31: Key lock device (three locks and one key);<br>SF32: Key lock device (three locks and two keys);<br>SF53: Key lock device (five locks and three keys) | 1. Select one from five key locks; |
| Mechanical interlocking | SR11: Mechanical interlocking device (two sets of steel cables, one for closing and one for opening);<br>SR12: Mechanical interlocking device (three sets of steel cables, one for closing and two for opening);<br>SR21: Mechanical interlocking device (three sets of steel cables, two for closing and one for opening);<br>SY11: Mechanical interlocking device (two sets of hard rods, one for closing and one for opening); | 1. Select one from five mechanical interlocks; |

## External Structure-Fixed Type

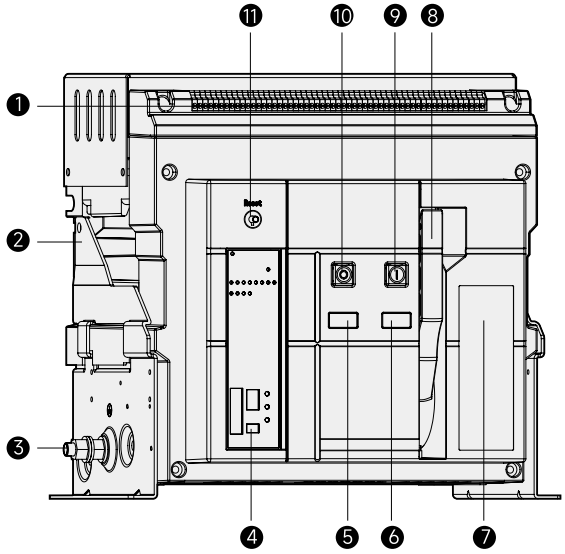


❶ Secondary wiring terminal
❷ Bracket
❸ Earthing bolt
❹ Controller
❺ ON/OFF indicator
❻ "charged", "discharged" indicator
❼ Nameplate
❽ Manual energy storage handle
❾ Closing button
❿ Disconnection button
⓫ Fault trip indicator/reset button

## External Structure-Draw-Out Type

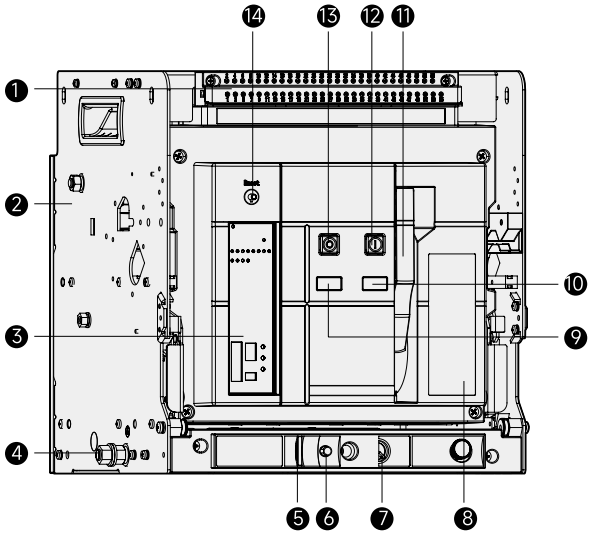


❶ Secondary wiring terminals
❷ Drawer seat
❸ Controller
❹ Earthing bolt
❺ Position-locking device
❻ Lock button
❼ Three-position indicator
❽ Nameplate
❾ ON/OFF indicator
❿ "charged", "discharged" indicator
⓫ Manual energy storage handle
⓬ Closing button
⓭ Disconnection button
⓮ Fault trip indicator/reset button

## 3D Graph of Internal Structure

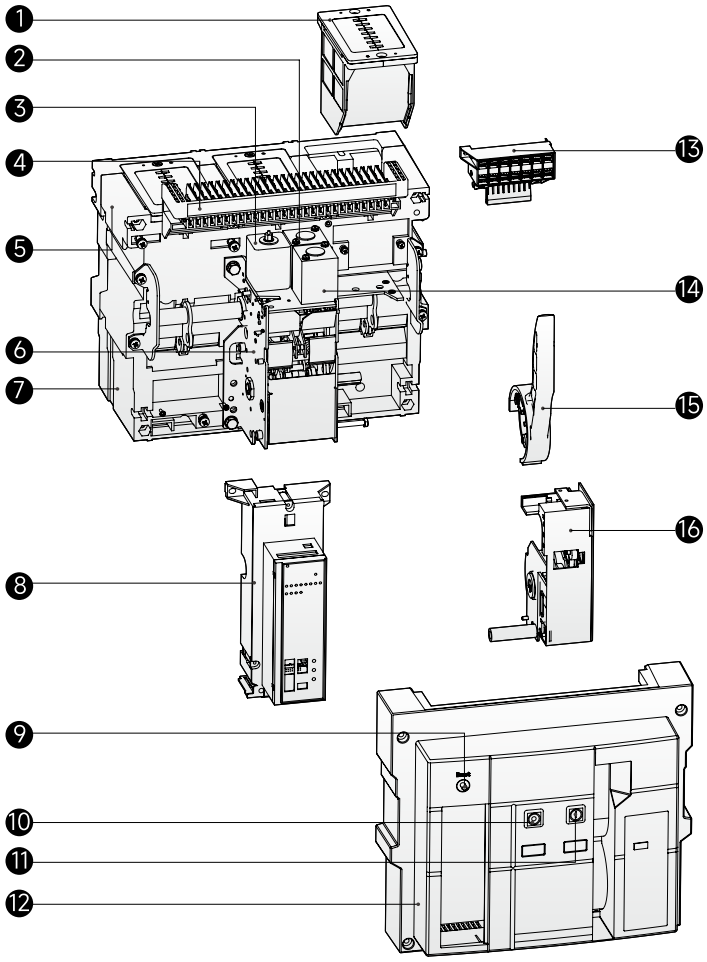

1. Arc chamber
2. Shunt release
3. Under-voltage release
4. Secondary wiring terminals
5. Handle
6. Operating mechanism
7. Body
8. Controller
9. Reset button
10. Disconnection button
11. Closing button
12. Face mask
13. Auxiliary contact
14. Closing coil
15. Energy storage handle
16. Electric operating mechanism

## 2D Graph of Internal Structure

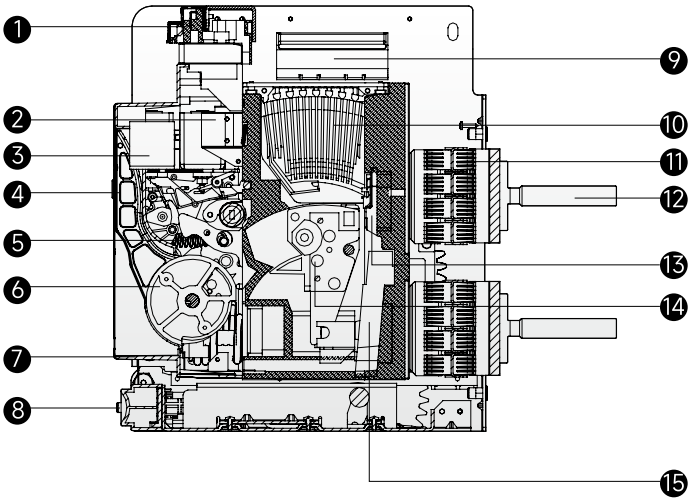

1. Secondary wiring terminals
2. Auxiliary contact
3. Closed electromagnet
4. Controller
5. Open spring
6. Energy storage handle
7. Close spring
8. Drive mechanism
9. Sheath
10. Arc chamber
11. Bridge type contact
12. Connecting terminal
13. Static contact
14. Dynamic contact
15. Current transformer

## Installation of Draw-Out Circuit Breaker

1.Draw out the circuit breaker body
(refer to the operation of the circuit breaker).
2.The circuit breaker is installed in the switchgear

| Circuit breaker | Hexagon-headed bolt GB5783- | Nut GB6170- | Washer GB97 GB93- |
|---|---|---|---|
| VW3-20S/H | M6 × 25 | M6 | Φ 6 |
| VW3-25H/HU/HV | M12 × 30 | M12 | Φ 12 |
| VW3-40H/HU/HV | M12 × 30 | M12 | Φ 12 |
| VW3-63H/HU/HV | M12 × 30 | M12 | Φ 12 |

*Specific installation method and positions shown on the right.*

3. Put the circuit breaker body in drawer seat(refer to the operation of the circuit breaker)

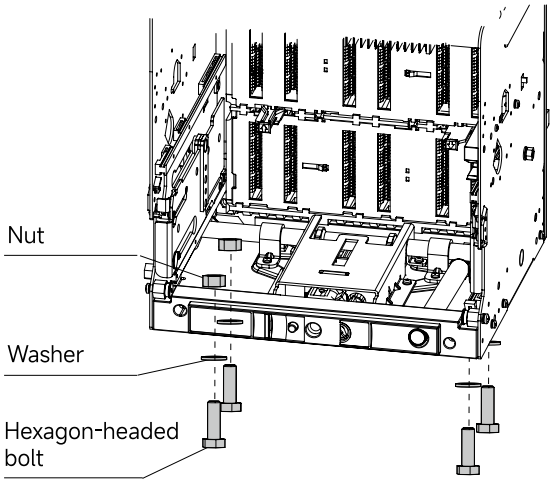


## Installation of Fixed Circuit Breaker

Put the circuit breaker in the switchgear.

| Circuit breaker | Hexagon-headed bolt GB5783- | Nut GB6170- | Washer GB97 GB93- |
|---|---|---|---|
| VW3-20S/H | M6 × 25 | M6 | Φ 6 |
| VW3-25H/HU/HV | M12 × 30 | M12 | Φ 12 |
| VW3-40H/HU/HV | M12 × 30 | M12 | Φ 12 |
| VW3-63H/HU/HV | M12 × 30 | M12 | Φ 12 |

*Specific installation method and positions shown on the right.*

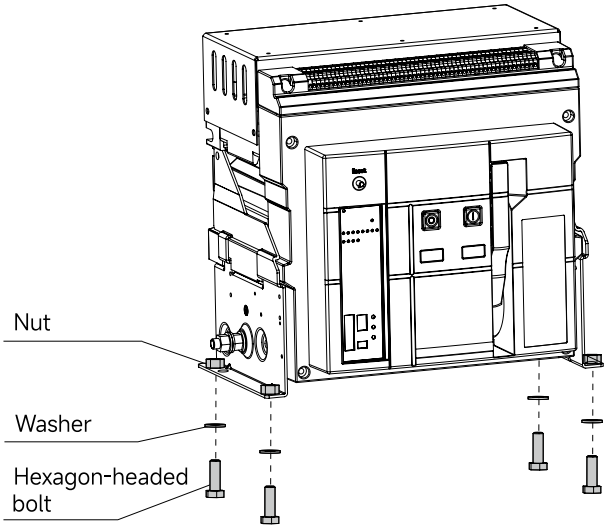


## Connection of Ground Terminal

It should be cleaned before grounding of the draw-out type and fixed type circuit breaker. And connect the PE wire to grounding bar of the switchgear by M12.
The area of wire refers to the follwing table.

| Cross-sectional area of phase wire (mm²) | Corresponding protective conductor (minimum cross-sectional area of PE (mm²) ) |
|---|---|
| 35 < S≤400 | S/2 |
| 400 < S≤800 | 200 |
| S > 800 | S/4 |

## Power Consumption (Ambient Temperature +40°C )

| Type | Power consumption (W) | |
|---|---|---|
| | Fixed type | Drawout type |
| VW3-20(S/H) | 123.5 | 331.5 |
| VW3-25(H/HU/HV) | 356.8 | 823.4 |
| VW3-40(H/HU/HV) | 486.7 | 856.8 |
| VW3-63(H/HU/HV) | 787 | 1145 |

## Derating Coefficient

If the ambient temperature is higher than +40°C,capacity can be corrected according to the following table

| Type | Rated current (A) | +40°C | +45°C | +50°C | +55°C | +60°C | +65°C | +70°C |
|---|---|---|---|---|---|---|---|---|
| VW3-20(S/H) | 200~1250 | 1 | 1 | 1 | 1 | 1 | 1 | 1 |
| | 1600~2000 | 1 | 1 | 1 | 1 | 0.98 | 0.93 | 0.87 |
| VW3-25(H/HU/HV) | 630~2000 | 1 | 1 | 1 | 1 | 1 | 1 | 1 |
| | 2500 | 1 | 1 | 1 | 1 | 0.99 | 0.94 | 0.88 |
| VW3-40(H/HU/HV) | 1000~2500 | 1 | 1 | 1 | 1 | 1 | 1 | 1 |
| | 2900 | 1 | 1 | 1 | 1 | 1 | 0.96 | 0.94 |
| | 3200 | 1 | 1 | 1 | 1 | 0.94 | 0.92 | 0.9 |
| | 3600 | 1 | 1 | 1 | 0.94 | 0.92 | 0.9 | 0.85 |
| | 4000 | 1 | 0.95 | 0.92 | 0.89 | 0.85 | 0.85 | 0.80 |
| VW3-63(H/HU/HV) | 4000~5000 | 1 | 1 | 1 | 1 | 1 | 1 | 1 |
| | 6300 | 1 | 1 | 0.98 | 0.93 | 0.89 | 0.85 | 0.82 |

If the altitude exceeds or equals to 2000m,the electric property can be corrected according to the following table;

| Altitude (m) | | 2000 | 3000 | 4000 | 4500 | 5000 |
|---|---|---|---|---|---|---|
| Power-frequency withstand voltage(V) | | 5000 | 4500 | 4000 | 3700 | 3500 |
| Rated impulse withstand voltage Uimp(kV) | | 18 | 15 | 15 | 12 | 12 |
| Correction coeficient for short-circuit breaking capacity | | 1 | 0.98 | 0.93 | 0.88 | 0.85 |
| Correction coeficient for working current | VW3-20(S/H) | 1 | 0.98 | 0.93 | 0.9 | 0.87 |
| | VW3-25(H/HU/HV) | 1 | 1 | 1 | 1 | 0.97 |
| | VW3-40(H/HU/HV) | 1 | 0.93 | 0.88 | 0.85 | 0.82 |
| | VW3-63(H/HU/HV) | 1 | 0.98 | 0.93 | 0.90 | 0.87 |

*The derating correction factor is only applicable to the maximum current of the shell frame*

## Copper busbar specification

| Frame size rated current Inm (A) | Rated current In (A) | Copper busbar specification | | |
|---|---|---|---|---|
| | | Number of busbar | | Dimension |
| | | Horizontal wiring | Vertical wiring | |
| VW3-20(S/H) | ≤630 | 1 | | 50×5 |
| | 800 | 1 | | 50×10 |
| | 1000 | 1 | | 50×10 |
| | 1250 | 2 | | 50×10 |
| | 1600 | 2 | | 50×10 |
| | 2000 | 3 | | 60×10 |
| VW3-25(H/HU/HV) | 630 | 2 | / | 80×5 |
| | 800 | 2 | / | 80×5 |
| | 1000 | 2 | / | 80×5 |
| | 1250 | 3 | / | 80×5 |
| | 1600 | 2 | / | 80×10 |
| | 2000 | 3 | / | 80×10 |
| | 2500 | 3 | / | 80×10 |
| VW3-40(H/HU/HV) | 1000 | 2 | 1 | 80×5 |
| | 1250 | 3 | 2 | 80×5 |
| | 1600 | 2 | | 80×10 |
| | 2000 | 3 | 2 | 80×10 |
| | 2500 | 3 | | 80×10 |
| | 2900 | 3 | | 100×10 |
| | 3200 | 4 | | 100×10 |
| | 3600 | 5 | 4 | 100×10 |
| | 4000 | 5 | 4 | 100×10 |
| VW3-63(H/HU/HV) | 4000 | 5 | 4 | 100×10 |
| | 5000 | 7 | 5 | 100×10 |
| | 6300 | 10 | 8 | 100×10 |

The table indicates the copper busbar specifications adopted when the circuit breaker is under the ambient temperature of 40°C and the open wide installation under the heating condition meets the stipulation in GB14048.2.

Recommended screw used of outlet busbar diameter

| Circuit breaker type | Outlet busbar diameter | Screws grade 8.8 (with washer) | Tightening torque |
|---|---|---|---|
| VW3-20 (S/H) | Φ11 | M10 | 50N.m |
| VW3-25 (H/HU/HV)<br>VW3-40 (H/HU/HV)<br>VW3-63 (H/HU/HV) | Φ13 | M12 | 70N.m |

Among them, the VW3-40 (H/HU/HV) drawout type 3P product has a lead out hole diameter of Φ15, and it is recommended to use M14 grade 8.8 screws with a tightening torque of 120N.m.

## Closed Electromagnet (B)

After storing energy, closed electromagnet may make the energy release instantly so that the circut breaker is closed quickly.

- VW3-20S/H

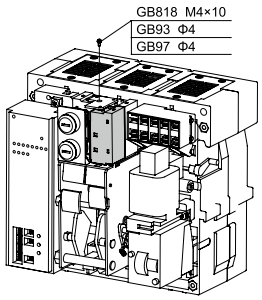


- VW3-25H/HU/HV
- VW3-40H/HU/HV
- VW3-63H/HU/HV

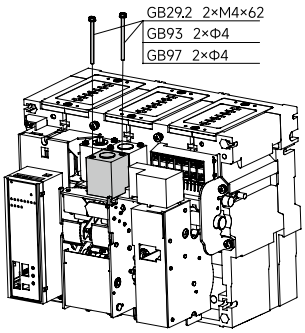


Power Consumption Table of Closed Electromagnet

| Rated insulation voltage(Ui) | Rated control supply voltage(Us) | Closed current | | Instantaneous power | |
|---|---|---|---|---|---|
| | | VW3-20 (S/H) | VW3-25 (H/HU/HV) VW3-40 (H/HU/HV) VW3-63 (H/HU/HV) | VW3-20 (S/H) | VW3-25 (H/HU/HV) VW3-40 (H/HU/HV) VW3-63 (H/HU/HV) |
| 400V | AC380V/AC400V | 1A | 2.1A | 360VA | 780VA |
| | AC220V/AC230V | 1.3A | 2.8A | 295VA | 575VA |
| | DC220V | 1.4A | 2.9A | 280W | 630W |
| | DC110V | 2.1A | 5.2A | 250W | 550W |

## Shunt Release (F)

To break the circuit breaker by remote control

- VW3-20S/H

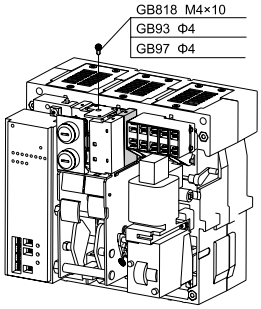


- VW3-25H/HU/HV
- VW3-40H/HU/HV
- VW3-63H/HU/HV

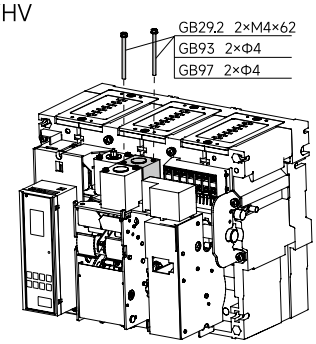


Power Consumption Table of Shunt Release

| Rated insulation voltage(Ui) | Rated control supply voltage(Us) | Closed current | | Instantaneous power | |
|---|---|---|---|---|---|
| | | VW3-20 (S/H) | VW3-25 (H/HU/HV) VW3-40 (H/HU/HV) VW3-63 (H/HU/HV) | VW3-20 (S/H) | VW3-25 (H/HU/HV) VW3-40 (H/HU/HV) VW3-63 (H/HU/HV) |
| 400V | AC380V/AC400V | 1A | 2.1A | 360VA | 780VA |
| | AC220V/AC230V | 1.3A | 2.8A | 295VA | 575VA |
| | DC220V | 1.4A | 2.9A | 280W | 630W |
| | DC110V | 2.1A | 5.2A | 250W | 550W |

## Motor operating mechanism (D)

The circuit breaker has the function of motor driven energy storage and automatic energy restoring.
(Manual energy storage can also be done)

- VW3-20S/H

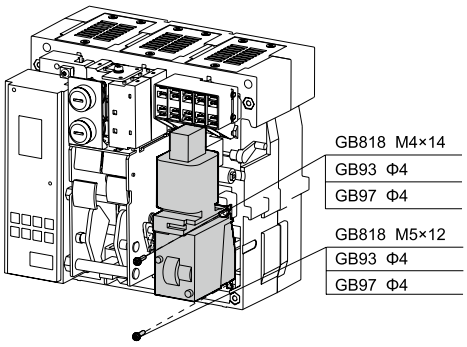


- VW3-25H/HU/HV
- VW3-40H/HU/HV
- VW3-63H/HU/HV

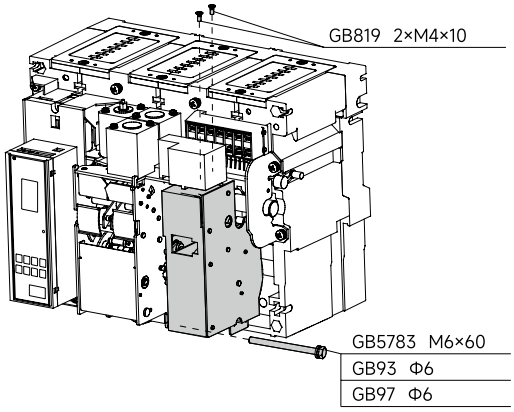


| Rated control supply voltage Us (V) | | AC230 | AC400 | DC110 | DC220 |
|---|---|---|---|---|---|
| Operation voltage | | (0.85 ~ 1.1) Us | | | |
| Power consumption | VW3-20 (S/H) | 100VA | | 100W | |
| | VW3-25 (H/HU/HV) | 150VA | | 150W | |
| | VW3-40 (H/HU/HV) | 150VA | | 150W | |
| | VW3-63 (H/HU/HV) | 190VA | | 190W | |
| Energy storage time(s) | | 5s | | | |

## Auxiliary contact

### Internal auxiliary contact

- VW3-20S/H

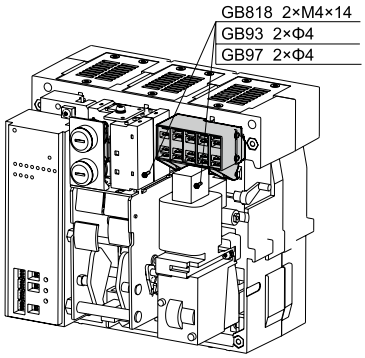


- VW3-25H/HU/HV
- VW3-40H/HU/HV
- VW3-63H/HU/HV

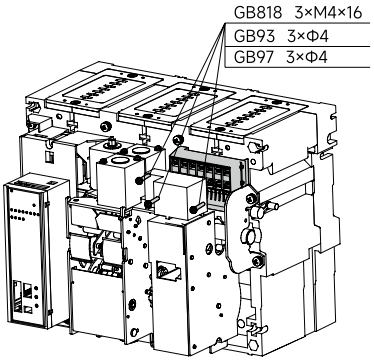


S/H/HU/HV/Standard have Max 4NO+4NC internal auxiliary contact, if more auxiliary contact, need the external auxiliary contact

### External auxiliary contact terminal number

Without common point

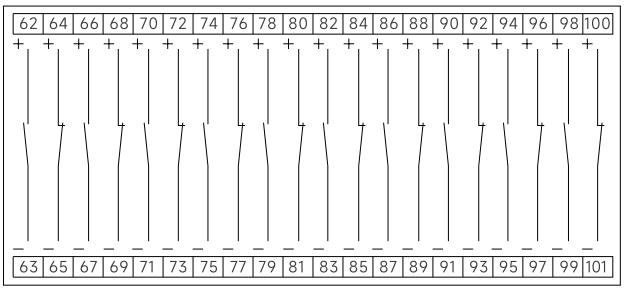


With common point

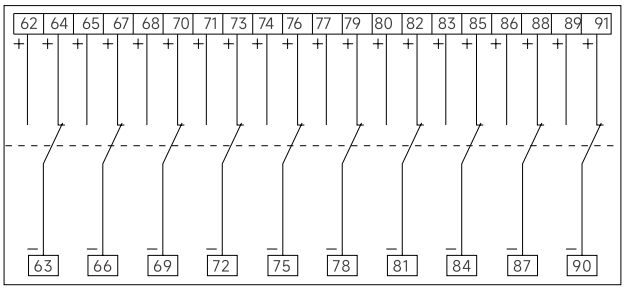


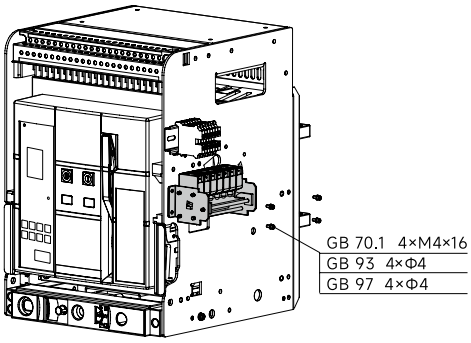


| Auxiliary contact | Rated operational voltage Ue(V) | Rated breaking capacity | Agreed thermal current $I_{th}$ (A) |
|---|---|---|---|
| | AC400 | 800VA | 16 |
| | AC230 | | |
| | DC220 | 300W | |
| | DC110 | | |
| Type | Code | Type | Code |
| 3NO3NC | A33 | 4NO4NC | A44 |
| 5NO5NC | A55 | 6NO6NC | A66 |
| 7NO7NC | A77 | 8NO8NC | A88 |
| 9NO9NC | A99 | 10NO10NC | A1010 |
| 11NO11NC | A1111 | 12NO12NC | A1212 |
| 13NO13NC | A1313 | 14NO14NC | A1414 |

Note: 1.S/H/HU/HV series have 3NO 3NC~14NO 14NC
NO:normally open contact
NC:normally closed contact

## Undervoltage (loss-of-voltage) release (Q)

- VW3-20S/H

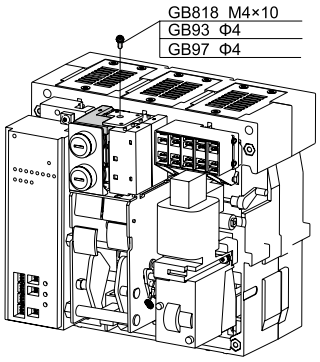


- VW3-25H/HU/HV
- VW3-40H/HU/HV
- VW3-63H/HU/HV

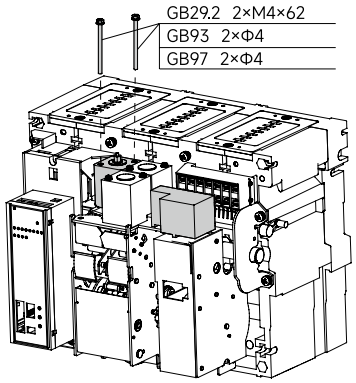


In the electrified networks where thunder and rain often happens or whose power supply is not stable, under-voltage release with time delay is highly recommended to protect the circuit breaker from releasing due to transient voltage-lowering. Time delay 1s,3s and 5s can be selected by the user. If there are some special requirements about time delay, please contact us.

| Rated operational voltage (V) | | Undervoltage release | | Loss-of-voltage release | |
|---|---|---|---|---|---|
| | | AC230 | AC400 | AC230 | AC400 |
| Action type | Type | Code | | | |
| | Instantaneous time | Q20 | Q10 | S20 | S10 |
| | Delay time 1s | Q21 | Q11 | S21 | S11 |
| | Delay time 3s | Q23 | Q13 | S23 | S13 |
| | Delay time 5s | Q25 | Q15 | S25 | S15 |
| Operation voltage (V) | | (0.35-0.7) Ue | | (0.1-0.35) Ue | |
| Guarantee the reliable closing voltage (V) | | (0.85-1.1) Ue | | | |
| Not guarantee the reliable closing voltage | | ≤ 0.35Ue | | | |
| Power consumption | | 15VA | | | |

Note: In thunderstorm prone areas or power grids with unstable power supply voltage, it is recommended to use undervoltage tripping with delay to prevent circuit breaker tripping due to short-term voltage drop. The delay time is generally 1S, 3S, 5S

### Undervoltage release

| Rated insulation voltage(Ui) | Rated control supply voltage(Us) | Instantaneous current | | Holding power | |
|---|---|---|---|---|---|
| | | VW3-20 (S/H) | VW3-25 (H/HU/HV) VW3-40 (H/HU/HV) VW3-63 (H/HU/HV) | VW3-20 (S/H) | VW3-25 (H/HU/HV) VW3-40 (H/HU/HV) VW3-63 (H/HU/HV) |
| 400V | AC380V/AC400V | 180W | 115W | 3.8W | 3.6W |
| | AC220V/AC230V | 148W | 118W | 2.4W | 3.4W |

### Loss-of-voltage release

| Rated insulation voltage(Ui) | Rated control supply voltage(Us) | Instantaneous current | | Holding power | |
|---|---|---|---|---|---|
| | | VW3-20 (S/H) | VW3-25 (H/HU/HV) VW3-40 (H/HU/HV) VW3-63 (H/HU/HV) | VW3-20 (S/H) | VW3-25 (H/HU/HV) VW3-40 (H/HU/HV) VW3-63 (H/HU/HV) |
| 400V | AC380V/AC400V | 650W | 280W | 0.43W | 6.36W |
| | AC220V/AC230V | 440W | 105W | 0.36W | 3.24W |

## Circuit Breaker Accessories

### Phase separator

- Phase separators are vertically installed between wiring boards of draw-out breakers' fixed part which strengthen insulation.

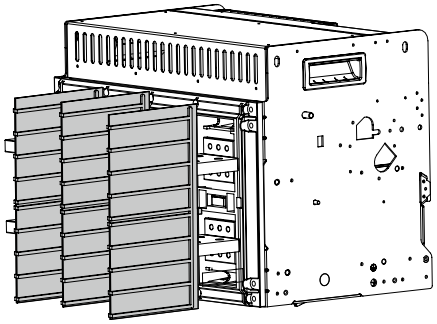

### Counter ( J )

- The counter counts operation times and the operation times can be read on the front panel. It is compatible with manual and electrical operation functions.

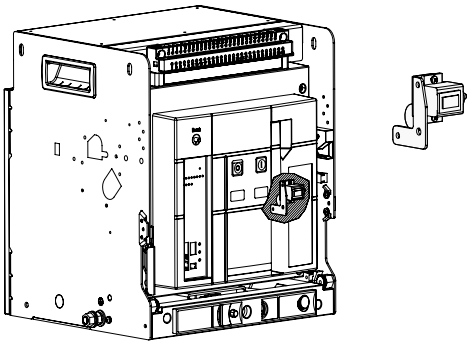

### Lock

Opening position lock

- Single lock

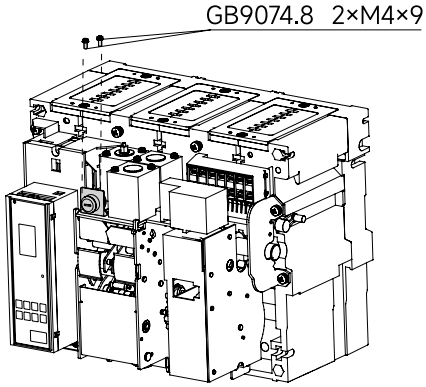


- Double lock linkage mechanism

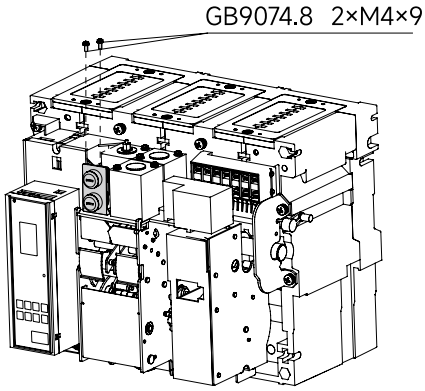


Opening position lock can lock the OFF button of the circuit breaker on the pressed position. After the opening position lock is chosen by the users, we would install and configurate.

Application method:

One lock one key (SF11):One circuit breaker with one lock and one key, and not allowed to closed when locked
Two locks one key (SF21):Two circuit breakers with two same lock and one key, and only allowed one circuit breaker closed
Three locks one key (SF31):Three circuit breakers with three same lock and one key, and only allowed one circuit breaker closed
Three locks two keys (SF32):Three circuit breakers with three same lock and two keys, and only allowed two circuit breakers closed
Five locks three keys (SF53): Five circuit breakers with five same lock and three keys, and only allowed three circuit breakers closed

## Position indication

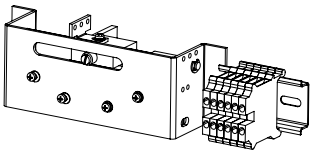

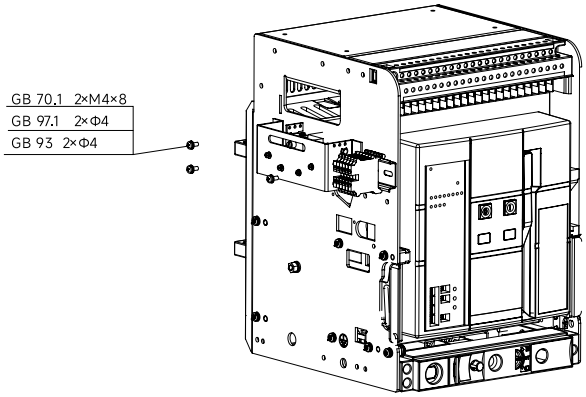


Three groups of contacts are provided to indicate present position state of the circuit breaker(connected, test, separated). When the breaker is in one of the positions, the relevant contacts will be connected.

## Doorframe (M)

Installed in the door, the door level can be up to IP40, circuit breaker to install a separate door degree IP30, fixed type and drawer has the corresponding frame.

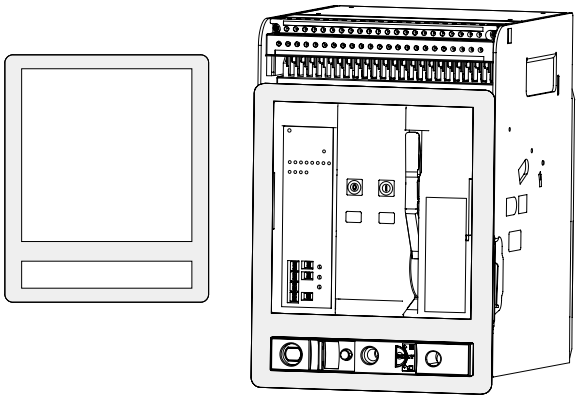

## Power supply module

- AC65~500V, DC80~700V

- Auxiliary power supply should be provided when using ground fault protection, communication, thermal memory functions or the breaker keeps input output signals in the state of OFF.

- Installation method shows as the chart. First, please fix guide rail to the side plate by M4 × 8 combination screw, then insert power supply module from each side of the guide rail. After that, you finish installing it.

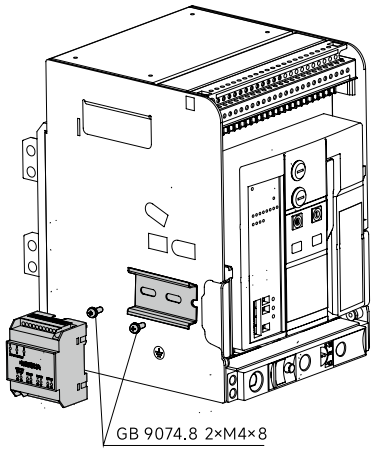

## External neutral current transformer (N)

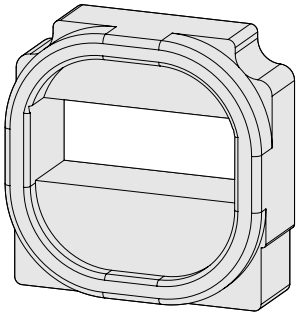

The TN-S distribution system uses a three pole circuit breaker and requires an external neutral current transformer.The ground current type N-phase transformer only measures the current in the N-phase as a ground protection judgment, and its installation direction is independent of the grounding wire method.

### The installation cautions as follows:

1. The external neutral current transformer has a twisted pair wire with the corresponding code for connecting the secondary terminal on the wire. 6 and 7. Just connect it to the secondary terminal according to the code on the wire.

2.The installation direction of the external neutral current transformer depends on the wiring method of the circuit breaker:
If the input line of the circuit breaker is upper side, the convex surface of the external neutral current transformer faces the transformer side;
If the input line of the circuit breaker is lower side , the plane of the external neutral current transformer faces the transformer side.
When selecting the VI type external neutral current transformer:
If the input line of the circuit breaker is upper line side, face the transformer side from the "P2" of the external neutral current transformer.
If the input line of the circuit breaker is lower side, face the transformer side from the "P1" of the external neutral current transformer

3. Select the transformer model based on the width of the N-phase busbar

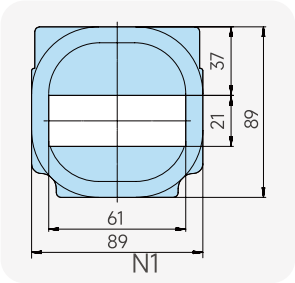


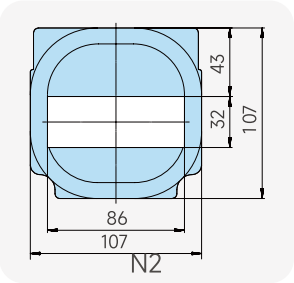


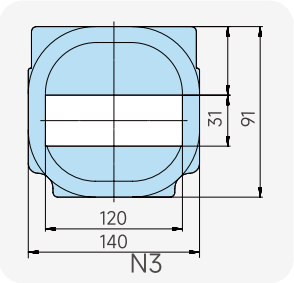


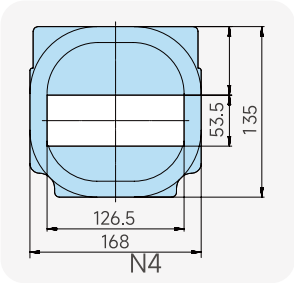


## Mechanical interlock

### Two interlocking cables circuit breakers or two interlocking hard rods circuit breakers

Circuit figure

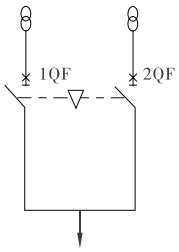


Possible operating modes

| 1QF | 2QF |
|---|---|
| 0 | 0 |
| 0 | 1 |
| 1 | 0 |

### Three circuit breaker interlocking hard rods

Circuit figure

Possible operating modes

Mode 1: Three power supplies can only cloees one circuit breaker

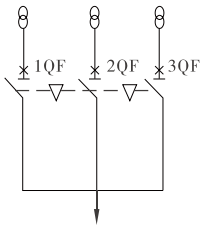


| 1QF | 2QF | 3QF |
|---|---|---|
| 0 | 0 | 0 |
| 1 | 0 | 0 |
| 0 | 1 | 0 |
| 0 | 0 | 1 |

Installation instructions of mechanical interlock:

Steel cable interlock of two sets of circuit breakers. Mounting procedures are as follows:

1. Extract the body of the circuit breaker from its respective drawer socket and move them away.
2. Fixed the interlocking piece to a specified location on the right side of the drawer socket by a bolt.
3. Connect two steel wire ropes in series. One end is combined inside the bolt of interlocking piece, the other end is fixed by clamp and it can tense steel cable basically (shown as the following picture).
4. Put body of each circuit breaker within drawer socket and let the circuit breaker on "connected" position.
5. When the two sets of breakers are in the state of OFF, let breaker 1 ON. Corresponding lever 11 rotates an angle anticlockwise due to effect of steel wire rope 2, lever 22 rotates an angle anticlockwise at the same time. Tripping axis of breaker 2 will be depressed (tightness of steel wire rope can be adjusted by adjusting part 2).
6. When the two sets of breakers are in the state of OFF, let breaker 2 ON. Corresponding lever 21 rotates an angle anticlockwise due to effect of steel wire rope 1,lever 12 rotates an angle anticlockwise at the same time. Tripping axis of breaker 1 will be depressed(tightness of steel wire rope can be adjusted by adjusting part 1).
7. Check whether installation is correct or not: close any circuit breaker and try to close another circuit breaker again. Correct installation if it cannot be closed.

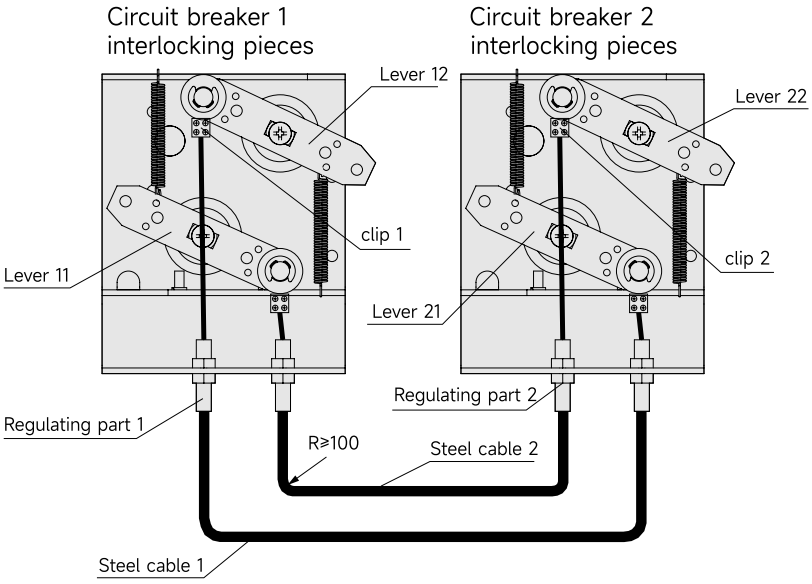


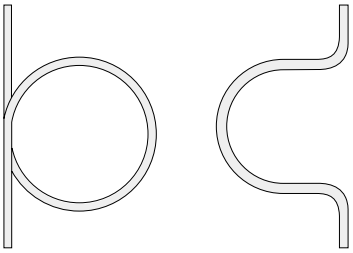

*Note: If the steel wire rope is too long, you can wind it into the above image. However, sum of angle bending should not surpass 720°.*

| Breaker 1 | Breaker 2 |
|---|---|
| 0 | 0 |
| 0 | 1 |
| 1 | 0 |

*Note:“ 1” indicates ON ;“ 0” indicates OFF*

Connecting rod interlock of two sets of circuit breakers stacked

Mounting procedures are as follows:

1. Extract the body of the circuit breaker from its respective drawer socket and move them away.
2. Fixed the interlocking piece to a specified location on the right side of the drawer socket by a bolt.
3. Mounting pull bar as shown the picture on the following and fixing it by a bolt when the pull bar is on the position in the picture shown.
4. Put body of each circuit breaker within drawer socket and let the circuit breaker on "connected" position.
5. When the two sets of breakers are in the state of OFF, let breaker 1 ON. Corresponding lever 11 rotates an angle anticlockwise. Adjusting length of pull bar 2 to make lever 22 rotate and tripping axis of breaker 1 depress to fix bolt 2 completely.
6. Close breaker 2(breaker 1 should be in the state of OFF). Corresponding lever 21 rotates an angle anticlockwise. Adjusting length of pull bar 1 to make lever 12 rotate and tripping axis of breaker 1 depress to fix bolt 2 completely.
7. Check whether installation is correct or not: close any circuit breaker and try to close another circuit breaker again. Correct installation if it cannot be closed.

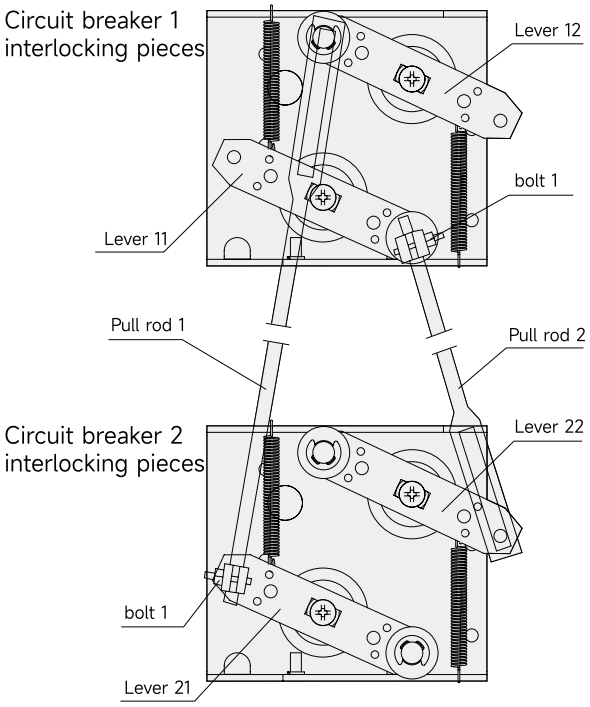


| Breaker 1 | Breaker 2 |
|---|---|
| 0 | 0 |
| 0 | 1 |
| 1 | 0 |

*Note:“ 1” indicates ON ;“ 0” indicates OFF*

## Energy-Storing Operation

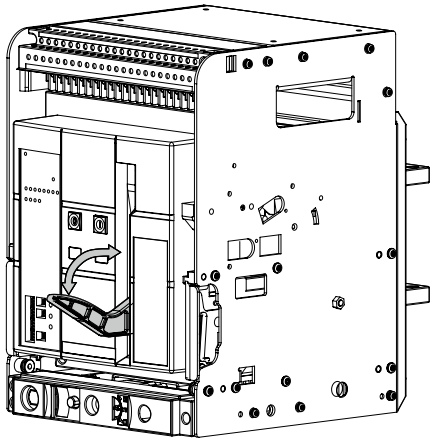

- Manual energy storage

  Energy storage is to pull the handle up and down repeatedly. It indicates that storing has been done when your hand can not feel counter-force of the handle. At the same time, "releasing, storing" indicator indicates "storing" position.

- Electric energy storage

  When the control circuit is powered on, electric energy storage is automatic storing

## On/Off Operation

- Manual operation

□ Manual ON

When the breaker is in the state of "storing" and "OFF", press green "I" button,the breaker will close and the "OFF, ON" indicator will switch from "O" to "I".

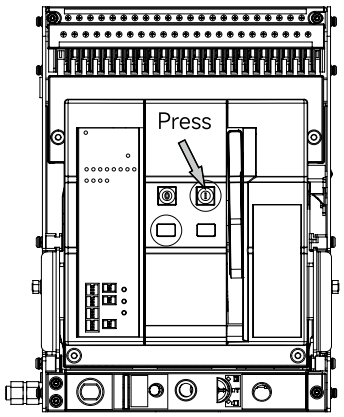


O→I

□ Manual OFF

When the breaker is in the state of ON, press red "O" button, the breaker will open and the "OFF, ON" indicator will switch from "I" to "O".

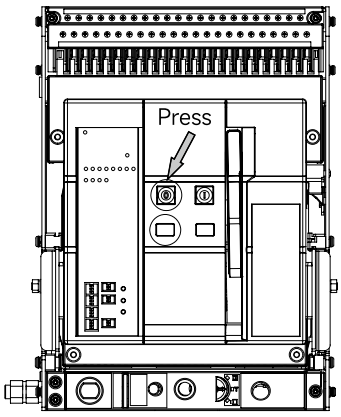


I→O

- Electric operation

ON: When the breaker is in the state of "storing" and "OFF", bring rated voltage to bear on closed electromagnet to let the breaker close.

OFF: When the breaker is in the state of ON, bring rated voltage to bear on shunt release to let the breaker open.

## Insert Operation of Draw-Out Circuit Breaker

1. Be sure that the drawer socket is in the state of "separated", and the rocking handle does not in the "rocking handle position hole". Use your thumb to press lock catch and pull out sliding plate according to direction shown in the picture until it can not be pulled.

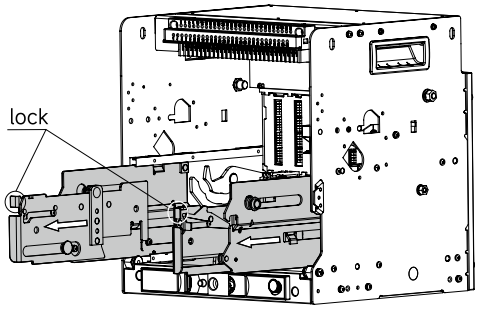


⚠ □ You should press "lock catch" when pulling sliding plate, then the sliding plate will be pulled out.

2. Put the body of the breaker on the sliding plate properly, then push the body of the breaker inward until it can not be pushed. Operation shown as the picture.

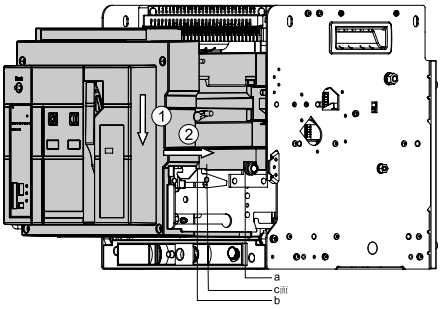


⚠ □ Be sure that fixture board "a" on the sliding board of draw-out socket entered into corresponding slot completely.

□ Sliding board "b" component cannot surpass the "C" surface of the body

3. Push the body of the breaker inward until you hear clicks. It indicates that the body has arrived "separated" position and "sliding board lock device" locks the body.
4. Pull out rocking handle.
5. Put hexagon head of the rocking handle to insert into the switching hole on drawer socket position completely. Press unlock button and rotate the rocking handle clockwise at the same time,then the body will act inwardly (during the process from "separated" position to "connected" position,the "unlock button" will pop up for each location upon arriving there so as to lock the rocking handle and it can not go on rotating. Press unlock button shown as the following picture to go on rotating rocking handle).

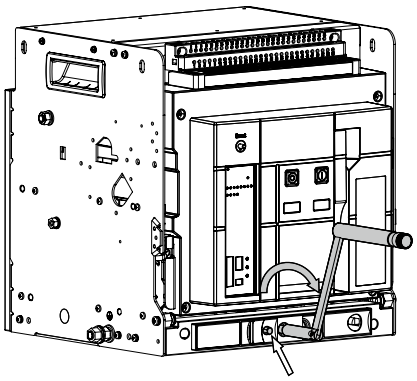

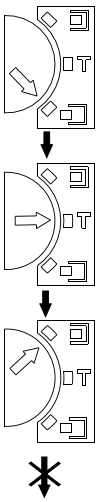

"Separated" position
Primary loop is separated from secondary loop and you can operate circuit breakers manually without any influence on power grid's operation.

"Test" position
Connect secondary loop and isolate primary loop, and you can operate circuit breakers manually and electrically.

"Connected" position
Connect primary and secondary loop,and you can operate circuit breakers manually and electrically.

⚠ □ When you can not press "unlock button",shake the rocking handle left and right slightly until unlock button can be pressed.
□ Test circuit breakers on connected position is prohibited.
□ When rotating circuit breakers to this position,"unlock button" pop ups. The circuit breaker has reached mounting position completely and you can not go on rotating rocking handle clockwise.

## Pull-Out Operation of Draw-Out Circuit Breaker

1. Pull out rocking handle and put hexagon head of the rocking handle to insert into the switching hole on drawer socket position completely.
2. Press position lock button and rotate the rocking handle anticlockwise at the same time (during the process from "separated" position to "connected" position, the "unlock button" will pop up for each location upon arriving there so as to lock the rocking handle and it can not go on rotating. Press unlock button shown as the following picture to go on rotating rocking handle).

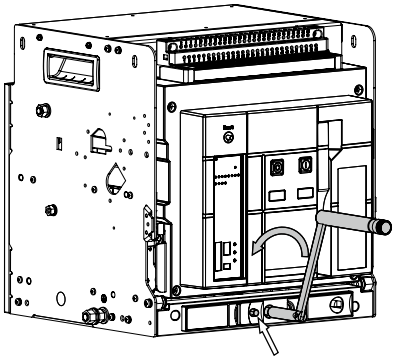

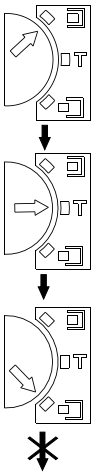

"Connected" position
Connect primary and secondary loop,and you can operate circuit breakers manually and electrically.

"Test" position
Connect secondary loop and isolate primary loop, and you can operate circuit breakers manually

"Separated" position
Primary loop is separated from secondary loop and you can operate circuit breakers manually without any influence on power grid's operation.

⚠
- When you can not press "unlock button", shake the rocking handle left and right slightly until unlock button can be pressed.
- Test circuit breakers on connected position is prohibited.

3. Put the rocking handle back and pull out the body of the breaker.

⚠
- You can only pull sliding board when rotating to "separated" position and the rocking handle must be pulled out.

4. Take the body of the breaker out

⚠
- Return the sliding board to its original place until you hear click. It indicates that "lock catch" locks sliding board.

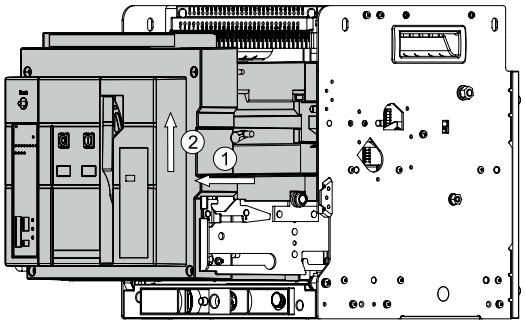


## Position Lock of Draw-Out Circuit Breaker

When the breaker is on any position, pull out a pull bar and hang a padlock to lock, and you can not continue switching positions.

1. Pull out the pull bar
2. Hang the padlock and the body of the breaker can not switch positions at that time.

⚠
- Pull out rocking handle from position switching hole firstly, then you can pull out lock position the pull bar.

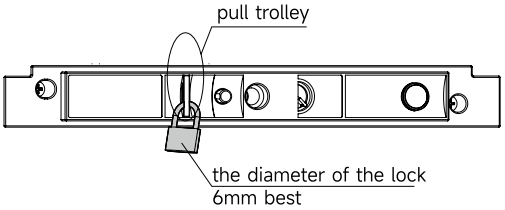

## VWC2 / VWC4 / VWC6 Controller

### Overview of controller

Type and code

| | Controller mode | Supply voltage Ue (V) |
|---|---|---|
| Controller | VWC2 | AC65~500V, DC80~700V |
| | VWC4 | |
| | VWC6 | |
| | VWC6 (Communication) | |

Operating environment

Operating temperature:-40°C~+70°C (The average value during 24 hours should not surpass +35°C)

Storage temperature: -40°C~ +85°C

The monthly average maximum relative humidity in the wettest month of the installation location does not exceed 90%, at the same time, the monthly average minimum temperature does not lower than -35°C in this month.

Allow the dew on the surface of the product due to temperature changes.

Pollution level: 3. (In the case of assembling with the circuit breaker.)

Installation category: III (In the case of assembling with the circuit breaker.)

Working power supply

Auxiliary power supply and power supply transformer supply electricity at the same time,so that the controller can work reliably under condition that short circuit and small load. There are the following two power supply methods of the controller:

a. CT power supply
   When rated current is bigger or equal to 400A, primary current single phase is not lower than 0.8In and three phases are not lower than 0.4In, then the controller can work normally. When rated current is smaller or equal to 400A, single phase is not lower than 1In and three phases are not lower than 0.6In, then the controller can work normally.

b. Auxiliary power supply
   Rated voltage: AC65~500V/DC80~700V
   Rated power loss: < 7W。

## Instructions of the Controller

### VWC2 controller

Panel introduction

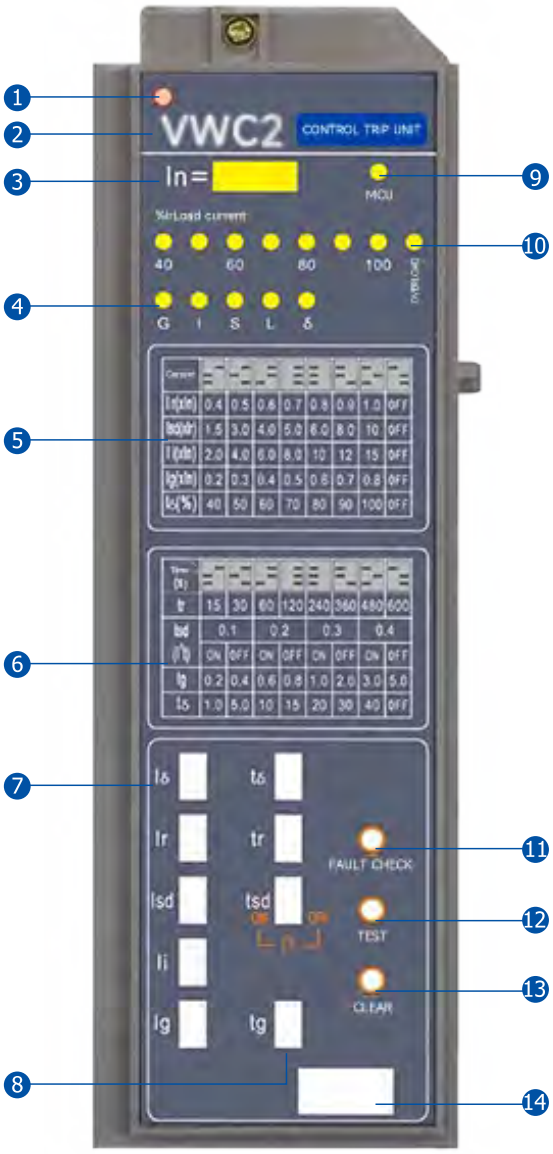


1. Reset button
2. Model specification
3. Rated current
4. Fault indicator light
5. Time setting control table
6. Current setting value control table
7. Current setting adjustment switch
8. Time setting adjustment switch
9. Running indicator
10. Overload indicator
11. Fault-checking button
12. Test button
13. Clear light button
14. Test port

### The Explanation of The Panel Displays

- MCU light: MCU will light up when the controller works normally.
- 40%~100% light: It real-time displays the percentage of the maximum current with respect to Ir. With 10% increment or decrement.
- Overload light: It lights up when the grid current reaches 1.15Ir.
- Fault load display light: It displays the causes of malfunction after the protection worked. After the circuit-breaker trips, it will display the types of failure if the power supply works normally, and than you can pressthe "clear light" button to exit. However, if the power supply disappeared, than, you need to power it up again and press the "fault-checking" button, so that it can display the causes of last fault tripping.

### Explanation of The Status Displays

- Fault status: It is the fault status when the "overload indicator" lights up, at this time, the button and the setting switch are locked, so the setting is invalid.
- Query status: The controller will enter the fault query status when you press the "fault-checking" button in the case of the controller works normally.
- Test status: When the controller works normally, pressing the "test" button, than, the controller sends instantaneous action commands, the circuit breaker shall be disconnected instantaneous, at the same time, controller panel displays the instantaneous fault, but does not record.

  Fault display description:
  When the controller enters the fault status, the "overload indicator" lights on, in the process of fault delay, the "fault indicator light" flashing shows the type of fault or alarm.

### Explanation of The Status Displays

If the users want to reset the protection current values and time value of VWC2 controller. The professionals move the dial switch by using a special tool (screwdriver for small clocks and watches), so as to make it point to the corresponding protection parameter of graphical position. (Pictures need to correspond with the form on the controller panel)

Example: Design parameters: Ir=1In, tr=60s; Isd=3In, tsd=0.1s; Ii=0.8In,tg=0.4s. The specific operation steps are as follows and the dial switch shows as the picture on the right after setting.

Note: Move the dial switch by using a special tool (screwdriver for small clocks and watches), so as to make it point to the scale value or position corresponding to protection parameter. When dialing, it should not point to the middle position between two scale values and the protection parameters shall not be cross-set (with the requirement of Ir<Isd<Ii ).

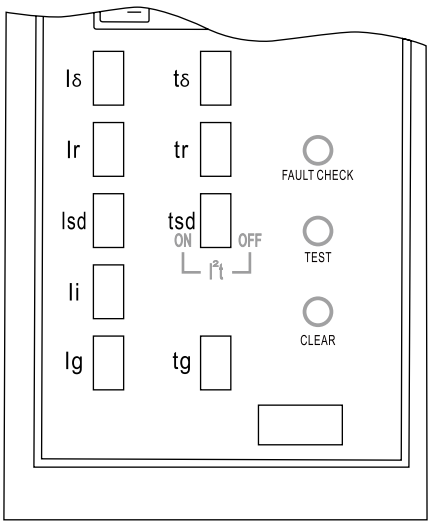

VWC2 Intelligent controller protection characteristics

| | | | | | | | | | | | |
|---|---|---|---|---|---|---|---|---|---|---|---|
| Overload long-time delay | | | | | | | | | | | |
| Operating current setting $I_r$ current tolerance ± 10% | | | (0.4、0.5、0.6、0.7、0.8、0.9、1.0)× $I_n$+OFF | | | | | | | | |
| Operating time $t_r$ tolerance ± 15% | Current | | Operating time | | | | | | | | |
| | ≤1.05$I_r$ | | Not operate within 2 hours | | | | | | | | |
| | ＞1.2$I_r$ | | Operate within 1 hours | | | | | | | | |
| $T=\frac{(1.5I_r)^2}{I^2}t_r$ | 1.5$I_r$ | | Setting time $t_r$(s) | 15 | 30 | 60 | 120 | 240 | 360 | 480 | 600 |
| | 2.0$I_r$ | | Operating time $T_r$(s) | 8.4 | 16.9 | 33.8 | 67.5 | 135 | 202.5 | 270 | 337.5 |
| | 7.2$I_r$ | | Operating time $T_r$(s) | 0.65 | 1.3 | 2.6 | 5.2 | 10 | 15.6 | 20 | 26 |
| Thermal memory protection | | | 30min+OFF（It will eliminate if the electricity goes off） | | | | | | | | |
| Short-circuit short-time | | | | | | | | | | | |
| Operating current setting $I_{sd}$ current tolerance ± 10% | | | （1.5、3、4、5、6、8、10）× $I_r$+OFF | | | | | | | | |
| Operating time $t_{sd}$ tolerance ± 15% | ON: The short-time delay inverse time limit is on | | Isd | 0.1 | | 0.2 | | 0.3 | | 0.4 | |
| | OFF: The short-time delay inverse time limit is off | | ($I^2t$) | ON | OFF | ON | OFF | ON | OFF | ON | OFF |
| Thermal memory protection | | | 30min+OFF（It will eliminate if the electricity goes off） | | | | | | | | |
| Short-circuit instantaneous | | | | | | | | | | | |
| Operating current setting $I_i$ current tolerance ± 10% | | | （2、4、6、8、10、12、15）× $I_n$+OFF | | | | | | | | |
| Tipping time $t_3$ | | | Within 40ms | | | | | | | | |
| Ground fault protection | | | | | | | | | | | |
| Operating current setting $I_g$ current tolerance ± 10% | | | （0.2、0.3、0.4、0.5、0.6、0.7、0.8）× $I_n$+OFF | | | | | | | | |
| Operating time $t_g$ tolerance ± 15% | Definite time | Setting time $t_g$(s) | 0.2 | 0.4 | 0.6 | 0.8 | 1 | 2 | 3 | 5 | |
| Current imbalance protection | | | | | | | | | | | |
| Adjustment range of unbalance rate δ | | | （40、50、60、70、80、90、100）%+OFF | | | | | | | | |
| Actuation characteristics or alarm characteristics | | | ≤0.9δ， No actuation | | | | | | | | |
| | | | ＞1.1δ， Time-delay actuation or alarm | | | | | | | | |
| Delay time (s) | | | tδ | 0.1 | 5 | 10 | 15 | 20 | 30 | 40 | OFF |

## Instructions of the Controller

### VWC4 controller

Panel introduction

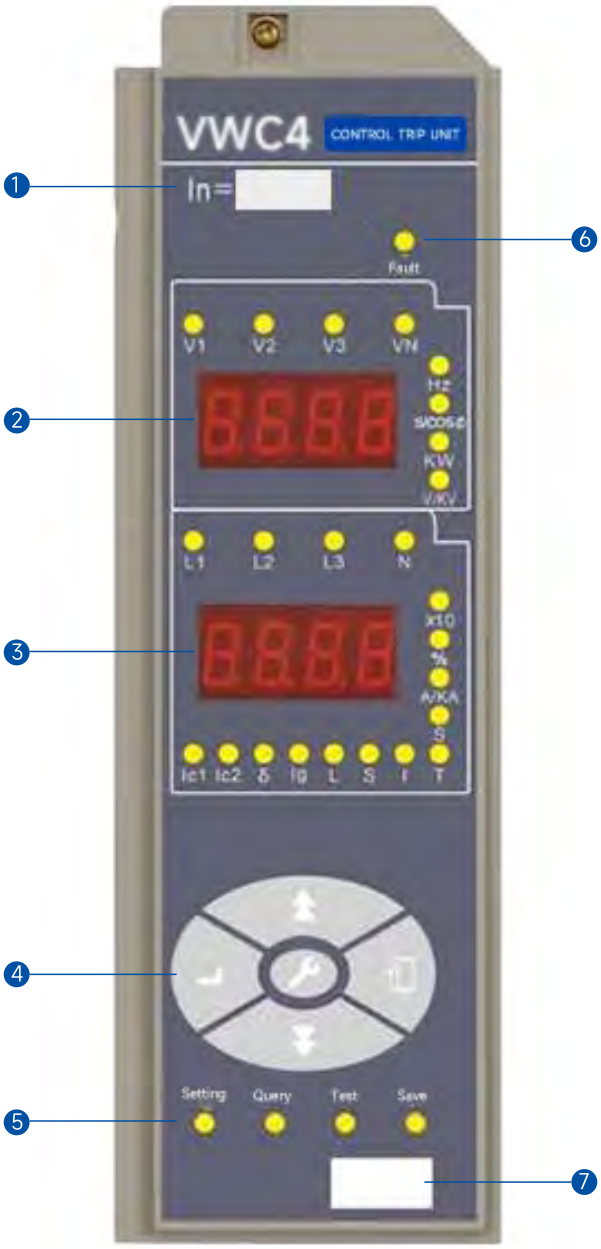


1. Rated current
2. Voltage and Power
3. Current
4. Setting button
5. Setup, query indicators
6. Fault and alarm indicators
7. Test port

Note: Protection parameters must not be cross set,
$I_r < I_{sd} < I_{io}$

Instructions of display

| Indicator | | | Status | Meaning |
|---|---|---|---|---|
| Hz | | | Brighten | Frequency |
| s/cosΦ | | | Brighten | Time/Power factor |
| kW | | | Brighten | Active power |
| | | | Blink | Active energy |
| X10 | | | Brighten | The number of the tripping and closing operations |
| % | | | Brighten | The value of the contact wear |
| % | L1/L2/L3 | δ | Brighten | The imbalance rate of L1/L2/L3 |
| A/kA | | | Brighten | A |
| | | | Blink | kA |
| A/kA | Ig | | Brighten | The value of ground current |
| | L1/L2/L3 | | Brighten | The value of the phase current |
| | N | | Brighten | The value of the N phase current |
| V/kV | V1/V2/V3 | | Brighten | The value of the line voltage |
| V/kV | V1/V2/V3 | N | Brighten | The value of the phase voltage |
| Setting | | | Brighten | Check or amend the setting value of protective characteristic |
| Query | | | Brighten | Query the history fault |
| Test | | | Brighten | The tripping test |
| Fault | | | Brighten | Indicate the type of fault, display the fault current and time circularly |
| Alarm | | | Brighten | In the process of the fault delay |
| Save | | | Brighten | Some parameters have been changed |
| T | | | Brighten | There is self-diagnosis fault, display the fault code by press "↵";<br>If the fault has been solved,clear the light of the self-diagnosis by press "⏏", to be the normal status.<br>If there is more self-diagnosis fault, press "▲、▼" to query the fault code |

■The fault codes are as follows:

| ER01 | ER02 | ER03 | ER12 | ER13 |
|---|---|---|---|---|
| $E^2$PROM error | A/D error | Temperture of the environment is over | ACB refuse to operating | Indication of contact maintentance |

## Setting of The Parameter

Operate the keys on the panel "" / ▲ / ▼ / / "," can achieve the function of setting, query and test.

Press the can choose 3 states:setting/query/test; Press "▲ / ▼" to increase and decrease the parameter value or choose the function; Press into the function status or save the changed parameter; Press return to the previous menu.

The first step:Press until the "setting" light blinks, press again,the "setting" light still blinks, the light of corresponding protection type will be ligten,and it indicates the controller into the status of the setting value.

The second step:Press "▲ / ▼" can display the original setting value of all kinds of setting value circularly. When you want to change one setting value, press , at this time the "setting" light is brighten, press the" ▲ / ▼" to adjust to the need value, press , the "save" light lighten once, then the settiing has been saved. Press to exit the change of the setting value.

The third step: Repeat the second step until finish all the value setting.Press to exit the setting function.Refer to the tables as following to change the setting value of all protect character.

| Red light | Green light | Setting value by press ▲ ,▼, , |
|---|---|---|
| δ | % | The setting value of imbalance of three phases |
| | S | The setting value of delay time $T_{\delta}$ |
| $I_g$ | A/KA | The setting value of ground current $I_g$ |
| | S | Inverse time setting value of the ground fault $T_g$ (The green light named S is brighten) |
| | | Inverse time shear coefficient of ground K (The green light named s is blink) |
| L | A/KA | The setting value of over-load current $I_r$ |
| | S | The setting value of over-load long time delay $T_r$ |
| S | A/KA | Inverse time setting value of short-circuit short delay current $I_{sd1}$ (The red light named s is brighten) |
| | | Definite time setting value of short-circuit short delay current $I_{sd2}$ (The red light named s is blink) |
| | S | Definite time setting value of short-circuit short delay time $T_{sd}$ |
| I | A/KA | The setting value of instantaneous short-circuit $I_i$ |
| $I_{c1}$ | A/KA | The current setting value of load monitoring $I_{C1}$ |
| | S | Inverse time setting value $T_{C1}$ of load monitoring $I_{C1}$ |
| $I_{c2}$ | A/KA | The current setting value of load monitoring $I_{C2}$ |
| | S | Inverse time setting value $T_{C2}$ of load monitoring $I_{C2}$ |

## Protection characteristics of VWC4 type intelligent controller

| Overload long-time delay | | | | | | | | | |
|---|---|---|---|---|---|---|---|---|---|
| Current setting value $I_r$,Current tolerance error ±10% | | (0.4 ~ 1.0)×$I_n$+OFF (step 1A) | | | | | | | |
| Tripping time $t_r$ tolerance error±15% | Current | Tripping time | | | | | | | |
| | ≤1.05$I_r$ | Inaction within 2h | | | | | | | |
| | >1.20$I_r$ | Action within 1h | | | | | | | |
| | Protection curve (default is $I^2T$) | | | | | | | | |
| | Standard inverse time limit $t=K/(N^{0.02}-1)$ | 0.61(0.005) | 0.98(1.0) | 1.47(0.012) | 2.46(0.02) | 3.68(0.03) | 4.91(0.04) | 6.14(0.05) | 8.29(0.075) |
| | | 11.1(0.09) | 17.2(0.14) | 24.6(0.2) | 36.8(0.3) | 49.1(0.4) | 61.4(0.5) | 73.7(0.6) | 86(0.6) |
| | Fast inverse time limit $t=K/(N-1)$ | 2(1) | 3.2(1.6) | 4.8(2.4) | 8(4) | 12(6) | 16(8) | 20(10) | 27(13.5) |
| | | 36(18) | 56(28) | 80(40) | 120(60) | 160(80) | 200(100) | 240(120) | 280(140) |
| | Express inverse time limit $t=K/(N^2-1)$ | 8(10) | 12.8(16) | 19.2(24) | 32(40) | 48(60) | 64(80) | 80(100) | 108(135) |
| | | 144(180) | 224(280) | 320(400) | 480(600) | 640(800) | 800(1000) | 960(1200) | 1120(1300) |
| | Express inverse time limit $t=(K/1.15)\times\log_e[N^2/(N^2-1.15)]$ | 6.22(10) | 9.96(16) | 14.9(24) | 24.9(40) | 37.3(60) | 49.8(80) | 62.2(100) | 84(135) |
| | | 112(180) | 174(280) | 249(400) | 373(600) | 498(800) | 622(1000) | 747(1200) | 871(1300) |
| | High-voltage fuse compatible $t=K/(N^4-1)$ | 2.46(10) | 3.94(16) | 5.9(24) | 9.85(40) | 14.8(60) | 19.7(80) | 24.6(100) | 33.2(135) |
| | | 44.3(180) | 68.9(280) | 98.5(400) | 147(600) | 197(800) | 246(1000) | 295(1200) | 344(1300) |
| | $I^2T$ Table $t=(1.5/N)^2\times K$ | 15(15) | 30(30) | 60(60) | 120(120) | 240(240) | 360(360) | 480(480) | 600(600) |
| | | 720(720) | 840(840) | 960(960) | | | | | |
| Note: N=I/Ir (I is the actual fault current, $I_r$ is the set value of overload current). The above set time value is action delay time when I=1.5$I_r$, with the of current Iincrease, the delay time will be decreases which can be calculated according to the curve formula. | | | | | | | | | |
| Thermal memory protection | | 30min+OFF(clear the thermal memory when the power off) | | | | | | | |
| Short-circuit short time-delay protection | | | | | | | | | |
| Current setting value $I_{sd}$,Current tolerance error ±10% | | (1.5 ~ 15)×$I_r$+OFF (step1A) | | | | | | | |
| Tripping time $t_{sd}$ tolerance error±15% | Fixed time-limit current setting value | 0.1 ~ 1s (step 0.1s) | | | | | | | |
| | Inverse time-limit current setting value | The curve is the same as the overload long delay curve, and the curve speed is 10 times faster than the overload long delay (dividing the time calculated by the overload delay curve formula by 10 is the inverse delay time of the short delay) | | | | | | | |
| Thermal memory protection | | 15min+OFF (clear the thermal memory when the power off) | | | | | | | |
| Note: When both the inverse time limit and fixed time limit protection are enabled, the inverse time limit current setting value must be less than the fixed time limit current setting value, otherwise the inverse time limit function will automatically fail. In addition, the actual delay time is not less than the set time of the fixed time limit | | | | | | | | | |

# Operation and Protection Features of the Controller

| | | |
|---|---|---|
| **Short-circuit instantaneous protection** | | |
| Current setting value $I_i$,Current tolerance error ±10% | | (1~20)×$I_n$ + OFF |
| Action features | | ≤0.85$I_i$ , inaction |
| | | >1.15 $I_i$ , action |
| **Ground protection** | | |
| Current setting value $I_r$,Current tolerance error ±10% | | (0.2~1.0)×$I_n$ + OFF |
| Action features | | ≤0.8$I_g$, inaction |
| | | ≥1.0 $I_g$ , delay action |
| Tripping time $t_g$ tolerance error±10% | Fixed time-limit | 0.1 ~ 100s+OFF (0.1~1s, step0.1s, 1s~100s, step1s, OFF: alarm does not trip) |
| | Inverse time shear coefficient $C_r$ | 1.5 ~ 6 + OFF (step 0.5, OFF : inverse time-limit OFF) |
| | Inverse time-limit formula | Formula $t=t_g \times C_r \times I_g/I$<br>t - Delay time; $T_g$ - Set delay time; $C_r$ - Shear coefficient; $I_g$ - Set actioncurrent;<br>I - Ground current; When the multiple of fault current ( $I/I_g$ ) is less than $C_r$, the action characteristic is inverse time characteristic; When the fault current multiple is greater than or equal to $C_r$, the action characteristic is a fixed time limit |
| **Neutral line protection** | | |
| Current setting value $I_n$,Current tolerance error ±10% | | (0.5, 1.0) × $I_n$ + OFF |
| Action time | | same as long time-delay time |
| **Current unbalance protection** | | |
| Protection setting value | | 40% ~ 100% (step1%) |
| Action or alarm features | | ≤0.9δ, inaction |
| | | ＞1.1δ, action delay or alarm |
| Delay time (s) | | 0.1 ~ 100s+OFF（OFF: Alarm only, inaction,step0.1s） |
| **Load monitoring function** | | |
| Mode 1 | Current setting $I_{C1}$, $I_{C2}$ Adjustment(A) | (0.2 ~ 1.0) ×$I_n$ + OFF (min100A ) |
| | Inverse time-limit $t_{C1}$, $t_{C2}$ | Same overload long delay curve |
| Mode 2 | Current setting $I_{C1}$, $I_{C2}$ Adjustment(A) | (0.2 ~ 1.0) ×$I_n$ + OFF (min100A) |
| | Inverse time-limit $t_{C1}$ | Same overload long delay curve |
| | Fixed time-limit $t_{C2}$ | 60s |

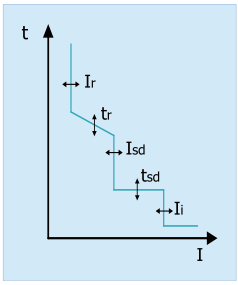


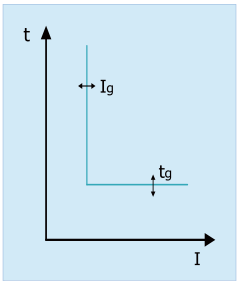

## Residual Current Protection Characteristics

### ■ Under-voltage protection

Voltages are less than the setting value, that is, when the maximum value of three line voltages is less than the under-voltage protection setting value, start the under-voltage protection actuation; and when the maximum value of three line voltages is greater than the return value, start the alarm actuation return.

Actuation characteristics: When the maximum value of voltage is less than the threshold value 1, start the alarm or trip delay; When the actuation delay time 2 is up, send out an alarm or trip signal, and start the under-voltage fault actuation; When the maximum value of voltage is greater than the return threshold 3, start the return delay; When the return delay time 4 is up, eliminate the alarm, and start the under-voltage fault return.

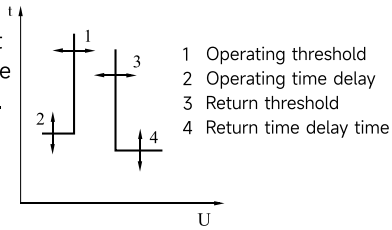


Operation principle of under voltage protection

| | | |
|---|---|---|
| Actuation threshold value(V) | 100 ~ return threshold (step size:1) | |
| Actuation delay time(S) | 0.2~60 (step size 0.1) | |
| Return threshold(V) | Operatingthreshold~ 1500 (step size:1) | There will be such setting when the implementation mode is alarm. Return value should bigger or euqal to operate value. |
| Return delay time(S) | 0.2~60 (step size:0.1) | |
| Operating or alarm characteristics (Time delay tolerance ±10%) | $U_{max}$ / Actuation threshold<0.9 | Definite time operating or alarm |
| | $U_{max}$ / Actuation threshold≥1.1 | No operate or alarm |
| Under-voltage alarm return characteristics (Time delay tolerance ±10%) | $U_{min}$ / Actuation threshold>1.1 | Return |
| | $U_{min}$ / Actuation threshold≤0.9 | No return |
| Alarm contact output | Under voltage alarm contact output can be co-opted when the imolementation mode is alarm. | |

### ■ Over-voltage protection

When the intelligent controller measures the true RMS value of loop voltage, if all three line voltages are more than the setting value, that is, the minimum value of three line voltages is greater than the setting value of over-voltage protection, start the over-voltage protection actuation; and if the minimum value of three line voltages is less than the return value, start the alarm actuation return.

Actuation characteristics: When the minimum line voltage is greater than the threshold value 1, start the alarm or trip delay; When the actuation delay time2 is up, send out an alarm or trip signal, and start the over-voltage fault actuation; When the mode of execution is "Alarm", if the minimum line voltage is less than the return threshold 3 after the alarm actuation, start the return delay; When the return delay time 4 is up, eliminate the alarm, and start the over-voltage fault return.

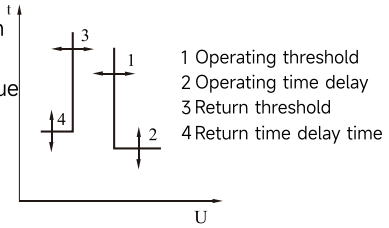


Operation principle of over-voltage protection

| | | |
|---|---|---|
| Actuation threshold value (V) | Return threshold ~ 1500 (step size:1) | |
| Actuation delay time (S) | 0.2~60 (step size 0.1) | |
| Return threshold (V) | 100 ~ Actuation threshold value (step:1) | There will be such setting when the implementation mode is alarm. Operate value should bigger or euqal to return value. |
| Return delay time (S) | 0.2~60 (step size:0.1) | |
| Operating or alarm characteristics (Time delay tolerance ±10%) | $U_{max}$ / Actuation threshold≥1.1 | Definite time operating or alarm |
| | $U_{max}$ / Actuation threshold<0.9 | No operate or alarm |
| Over-voltage alarm return characteristics (Time delay tolerance ±10%) | $U_{min}$ / Actuation threshold≤0.9 | Return |
| | $U_{min}$ / Actuation threshold>1.1 | No return |
| Alarm contact output | Over voltage alarm contact output can be co-opted when the imolementation mode is alarm. | |

VCW6 Controller

Panel introduction

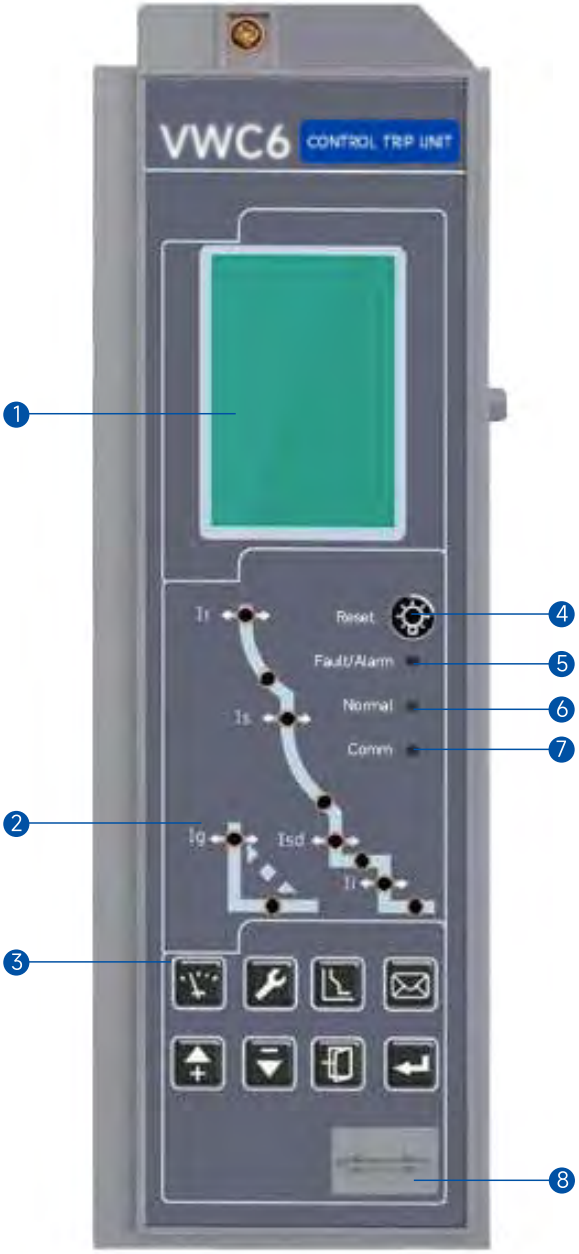


1. LCD interface display
2. Protection curve
3. Function buttons
4. Fault and alarm reset button
5. Fault alarm indicators
6. Normal indicators
7. Communication indicators
8. Test port

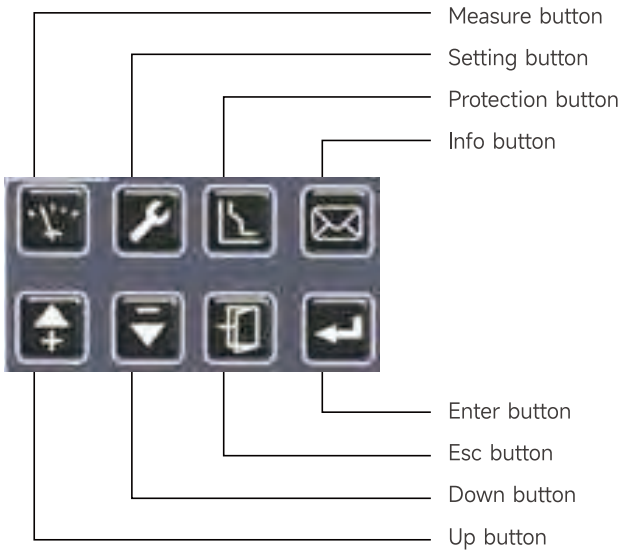


Note: Protection parameters must not be cross set, $I_r < I_{sd} < I_{io}$

⚠ Do not cross set protection parameters, $I_r < I_{sd} < I_i$ is required

## ■ Default interface

It displays current all phases current column when other functions are not operate.

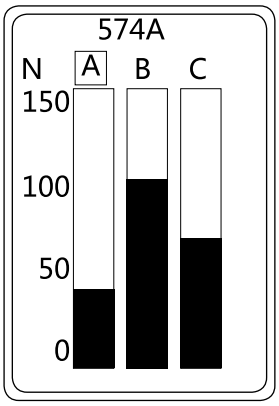


## ■ Measurement menu

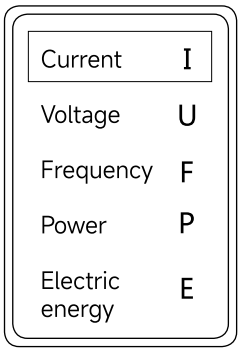


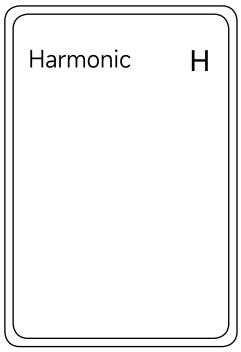


Press button to return to default interface.

Press to jump to measurement menu on other non-fault interfaces.

## ■ System parameters setting menu

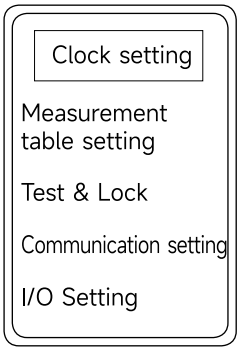


Press menu to return to default interface, on other non-fault interfaces press to jump to system parameters setting menu.

The system will return to default interface after several minutes if there are no other operations.

## ■ Protection parameters setting men

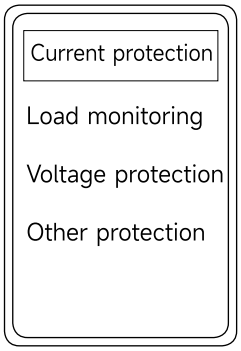


Press menu to return to default interface, on other non-fault interfaces press to jump to protection parameters setting menu.

The system will return to default interface after several minutes if there are no other operations.

- "History records and maintenance"menu

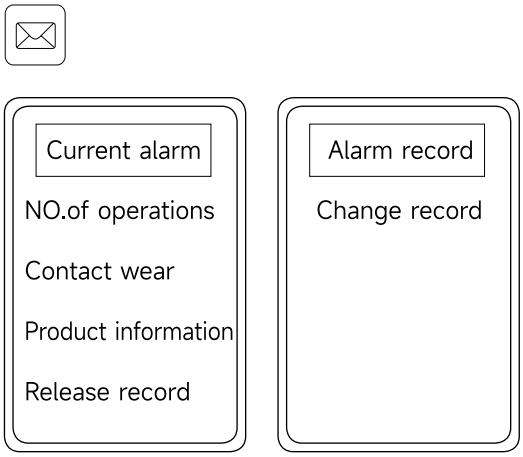


Press menu to return to default interface, on other non-fault interfaces press to jump to history parameters setting menu.

The system will return to default interface after several minutes if there are no other operations.

Operation sample of submenu: overload long-time delay

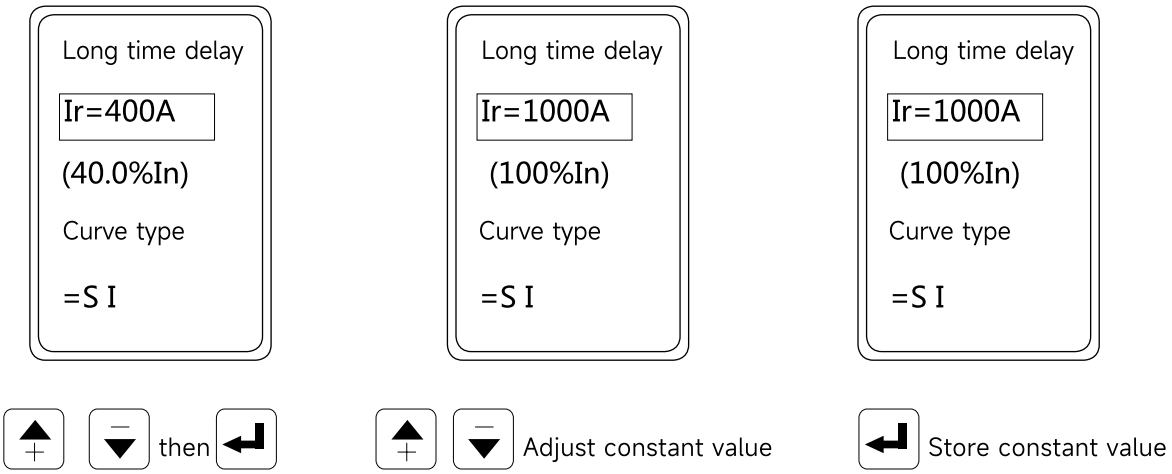

## Protection characteristics of VWC6 type controller

| Overload long-time delay | | | | | | | | | |
|---|---|---|---|---|---|---|---|---|---|
| Current setting value $I_r$, Current tolerance error ±10% | | (0.4 ~ 1.0)×$I_n$+OFF (step 1A) | | | | | | | |
| Tripping time $t_r$ tolerance error±15% | Current | Tripping time | | | | | | | |
| | | Inaction within 2h | | | | | | | |
| | > 1.20$I_r$ | Action within 1h | | | | | | | |
| | Protection curve (default is $I^2T$) | ≤1.05IrTripping time $t_r$ (factor K in bracket) | | | | | | | |
| | Standard inverse time limit $t=K/(N^{0.02}-1)$ | 0.61(0.005) | 0.98(1.0) | 1.47(0.012) | 2.46(0.02) | 3.68(0.03) | 4.91(0.04) | 6.14(0.05) | 8.29(0.075) |
| | | 11.1(0.09) | 17.2(0.14) | 24.6(0.2) | 36.8(0.3) | 49.1(0.4) | 61.4(0.5) | 73.7(0.6) | 86(0.6) |
| | Fast inverse time limit $t=K/(N-1)$ | 2(1) | 3.2(1.6) | 4.8(2.4) | 8(4) | 12(6) | 16(8) | 20(10) | 27(13.5) |
| | | 36(18) | 56(28) | 80(40) | 120(60) | 160(80) | 200(100) | 240(120) | 280(140) |
| | Express inverse time limit $t=K/(N^2-1)$ | 8(10) | 12.8(16) | 19.2(24) | 32(40) | 48(60) | 64(80) | 80(100) | 108(135) |
| | | 144(180) | 224(280) | 320(400) | 480(600) | 640(800) | 800(1000) | 960(1200) | 1120(1300) |
| | Express inverse time limit $t=(K/1.15)\times\log_e[N^2/(N^2-1.15)]$ | 6.22(10) | 9.96(16) | 14.9(24) | 24.9(40) | 37.3(60) | 49.8(80) | 62.2(100) | 84(135) |
| | | 112(180) | 174(280) | 249(400) | 373(600) | 498(800) | 622(1000) | 747(1200) | 871(1300) |
| | High-voltage fuse compatible $t=K/(N^4-1)$ | 2.46(10) | 3.94(16) | 5.9(24) | 9.85(40) | 14.8(60) | 19.7(80) | 24.6(100) | 33.2(135) |
| | | 44.3(180) | 68.9(280) | 98.5(400) | 147(600) | 197(800) | 246(1000) | 295(1200) | 344(1300) |
| | $I^2T$ Table $t=(1.5/N)^2\times K$ | 15(15) | 30(30) | 60(60) | 120(120) | 240(240) | 360(360) | 480(480) | 600(600) |
| | | 720(720) | 840(840) | 960(960) | | | | | |
| Note: $N=I/I_r$ (I is the actual fault current, $I_r$ is the set value of overload current). The above set time value is action delay time when $I=1.5I_r$, with the of current I increase, the delay time will be decreases which can be calculated according to the curve formula. | | | | | | | | | |
| Thermal memory protection | | 30min+OFF(clear the thermal memory when the power off) | | | | | | | |
| **Short-circuit short time-delay protection** | | | | | | | | | |
| Current setting value $I_{sd}$,Current tolerance error ±10% | | (1.5 ~ 15)×$I_r$+OFF (step 1A) | | | | | | | |
| Tripping time $t_{sd}$ tolerance error±15% | Fixed time-limit current setting value | 0.1 ~ 0.4s (step 0.1s) | | | | | | | |
| | Inverse time-limit current setting value | The curve is the same as the overload long delay curve, and the curve speed is 10 times faster than the overload long delay (dividing the time calculated by the overload delay curve formula by 10 is the inverse delay time of the short delay) | | | | | | | |
| Thermal memory protection | | 15min+OFF (clear the thermal memory when the power off) | | | | | | | |
| Note: When both the inverse time limit and fixed time limit protection are enabled, the inverse time limit current setting value must be less than the fixed time limit current setting value, otherwise the inverse time limit function will automatically fail. In addition, the actual delay time is not less than the set time of the fixed time limit | | | | | | | | | |

# Operation and Protection Features of the Controller

| | | |
|---|---|---|
| **Short-circuit instantaneous protection** | | |
| Current setting value $I_i$,Current tolerance error ±10% | | (1~20)×$I_n$ + OFF (min100A) |
| Action features | | ≤0.85$I_i$ , inaction |
| | | >1.15$I_i$ , action |
| **Ground protection** | | |
| Current setting value $I_r$,Current tolerance error ±10% | | (0.2~1.0)×$I_n$ + OFF (min100A) |
| Action features | | ≤0.8$I_g$, inaction |
| | | ≥1.0 $I_g$, delay action |
| Tripping time $t_g$ tolerance error±10% | Fixed time-limit | 0.1 ~ 100s+OFF (0.1~1s, step0.1s, 1s~100s, step1s, OFF: alarm does not trip) |
| | Inverse time shear coefficient $C_r$ | 1.5 ~ 6 + OFF (step 0.5, OFF : inverse time-limit OFF) |
| | Inverse time-limit formula | Formula $t=t_g \times C_r \times I_g/I$<br>t - Delay time; $T_g$ - Set delay time; $C_r$ - Shear coefficient; $I_g$ - Set action current; I - Ground current; When the multiple of fault current ($I/I_g$) is less than $C_r$, the action characteristic is inverse time characteristic; When the fault current multiple is greater than or equal to $C_r$, the action characteristic is a fixed time limit |
| Execution mode:tripping + close | | |
| Ground protection (The ground alarm and ground protection functions are independent of each other and have their own independent parameter settings, which can exist simultaneously | | |
| Alarm action setting value | current | (0.2 ~ 1.0) × $I_n$ (min100A) |
| | time | 0.1 ~ 100s+OFF |
| Alarm cleared setting | current | (0.2 ~ 1.0) × $I_n$ (min100A) |
| | time | 0.1 ~ 100s+OFF |
| **Neutral line protection** | | |
| Current setting value $I_N$,Current tolerance error ±10% | | (0.5, 1.0, 1.6, 2.0) × $I_n$ + OFF |
| Action time | | same as long time-delay time |
| **Current unbalance protection** | | |
| Protection setting value | | 5% ~ 60% (step1%) |
| Delay time | | 0.1s ~ 40s (step 0.1s) |
| Protection return setting value | | 5% ~ start value (step 1%) |
| Delay time | | start value (step 1%) |
| Action or alarm features | | ≤0.9δ, inaction |
| | | > 1.1δ, action delay or alarm |
| Execution mode :Tripping+alarm+close | | |
| **Load monitoring function** | | |
| Mode 1 | Current setting $I_{C1}$, $I_{C2}$ | (0.2 ~ 1) ×$I_r$ (min100A , step1A) |
| | Inverse time-limit $t_{C1}$, $t_{C2}$ | (20% ~ 80%) ×$t_r$ |
| Mode 2 | Current setting $I_{C1}$ (unloading) | (0.2 ~ 1) ×$I_r$ (min100A) |
| | Current setting $I_{C2}$ (return) | 0.2×$I_r$ ~ $I_{C1}$ |
| | Inverse time-limit $t_{C1}$ | (20% ~ 80%) ×tr |
| | Fixed time-limit $t_{C2}$ | 10s ~ 600s |

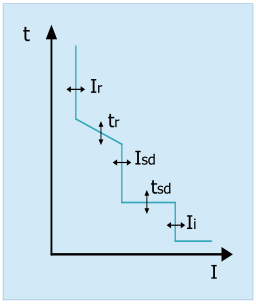


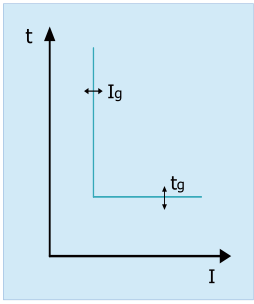

## Other Protection Characteristics of Controller

### ■ Under voltage protection

Controller measures the real virtual value of one loop voltage. When three line voltages are smaller than setting value, that is, the maximum value of the three line voltages is smaller than under voltage protection setting value, under voltage protection operates; When the maximum value of the three line voltages is bigger than return value, alarm operation returns.

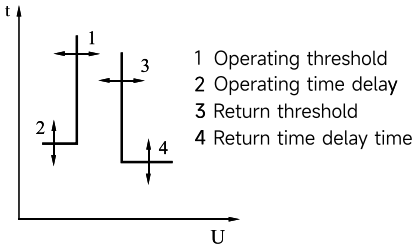


Operation principle of under voltage protection

Operating characteristics:
When the maximum value of voltage is smaller than operating threshold (1) alarm operates or trip delays. Alarm or trip signal will be sent when operating time delay (2) arrives, then under voltage fault operates; When the maximum value of voltage is bigger than return threshold (3) return time delay operates; When return time delay (4) arrives, alarm will be removed and under voltage fault returns.

| | | |
|---|---|---|
| Actuation threshold value(V) | 100 ~ return threshold value (step: 1) | |
| Actuation delay time(S) | 0.2 ~ 60 (Step: 0.1) | |
| Return threshold value(V) | Actuation threshold value~1500 (step:1) | Only when the mode of execution is "Alarm", can this value be set, meanwhile the return value shall be not more than the return value. |
| Return delay time(S) | 0.2 ~ 60 (Step: 0.1) | |
| Actuation or alarm characteristics (delay tolerance± 10%) | Umax/Actuation threshold value< 0.9 | Definite time-limit actuation or alarm |
| | Umax/Actuation threshold value ≥1.1 | No actuation or alarm |
| Under-voltage alarm return characteristics (delay tolerance± 10%) | Umin/Actuation threshold value > 1.1 | Return |
| | Umin/Actuation threshold value ≤0.9 | No return |
| Alarm contact output | When the mode of execution is "Alarm", "Under-voltage alarm" contact output can be selected additionally. | |

### ■ Overvoltage protection

Controller measures the real virtual value of one loop voltage. When three line voltages are all bigger than setting value, that is, the minimum value of the three line voltages is bigger than over voltage protection setting value, over voltage protection operates; When the three line voltages is smaller than return value, alarm operation returns.

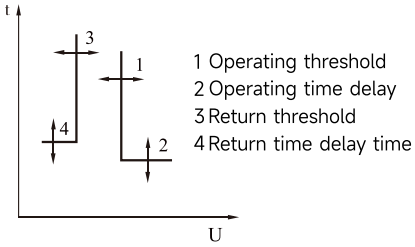


Operation principle of over-voltage protection

Operating characteristics: When the smallest line voltage is bigger than operating threshold (1) alarm operates or trip delays. Alarm or trip signal will be sent when operating time delay (2) arrives , then under voltage fault operates; return time delay operates; As the implementation method is alarm, after alarming, when the smallest line voltage is smaller than return threshold (3) and also return time delay (4) arrives, alarm will be removed and under voltage fault returns.

| | | |
|---|---|---|
| Actuation threshold value(V) | Return threshold value~1500 (step: 1) | |
| Actuation delay time(S) | 0.2 ~ 60 (Step : 0.1) | |
| Return threshold value(V) | 100 ~ Actuation threshold value (step: 1) | Only when the mode of execution is "Alarm", can this value be set, meanwhile the start value shall be not less than the start value. |
| Return delay time(S) | 0.2 ~ 60 (Step : 0.1) | |
| Actuation or alarm characteristics (delay tolerance± 10%) | Umax/Actuation threshold value ≥1.1 | Definite time-limit actuation or alarm |
| | Umax/Actuation threshold value < 0.9 | No actuation or alarm |
| Under-voltage alarm return characteristics (delay tolerance± 10%) | Umin/Actuation threshold value ≤0.9 | Return |
| | Umin/Actuation threshold value >1.1 | No return |
| Alarm contact output | When the mode of execution is "Alarm", "Overvoltage alarm" contact output can be selected additionally. | |

## ■ Voltage imbalance protection

Based on the imbalance rate between three line voltages, the voltage imbalance rate protection starts its protection actuation. When the intelligent controller measures the imbalance rate of voltage, if the voltage imbalance rate is greater than the actuation threshold value, start the protection actuation; and if the voltage imbalance rate is less than the actuation threshold value, start the alarm actuation return.

Actuation characteristics:

When the voltage imbalance is greater than the threshold value 1, start the alarm or trip delay; When the actuation delay time 2 is up, start the voltage imbalance fault actuation; When the mode of execution is "Alarm", if the voltage imbalance rate is less than the return threshold 3 after the alarm actuation, start the return delay; When the return delay time 4 is up, eliminate the alarm, and start the voltage imbalance fault return.

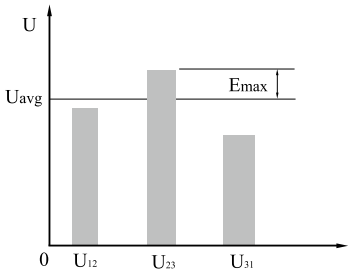


Calculation method of voltage imbalance rate:

$$U_{unbal} = \frac{|E_{max}|}{U_{avg}} \times 100\%$$

$$U_{avg} = \frac{U_{12} + U_{23} + U_{31}}{3}$$

$E_{max}$: Maximum difference between the line voltage and its average value.

$U_{avg}$: Average of sum of the RMS values of three-phase line voltages.

| | | |
|---|---|---|
| Actuation threshold value | 2% ~ 30% (Level difference : 1%) | |
| Actuation delay time (s) | 0.2 ~ 60 (Level difference : 0.1) | |
| Return threshold value | 2%~Start value (level difference: 1%) | Only when the mode of execution is "Alarm", can this value be set, meanwhile, the start value shall be not less than the start value. |
| Return delay time | 0.2 ~ 60 (level difference: 0.1) | |
| Actuation or alarm characteristics (delay tolerance± 10%) | Actual voltage imbalance rate / setting value≥1.1 | Definite time-limit actuation or alarm |
| | Actual voltage imbalance rate / setting value < 0.9 | No actuation or alarm |
| Voltage imbalance alarm return characteristics (delay tolerance± 10%) | Actual voltage imbalance rate / setting value≤0.9 | Return |
| | Actual voltage imbalance rate / setting value> 1.1 | No return |
| Alarm contact output | When the mode of execution is "Alarm", "Voltage imbalance alarm" contact output can be selected additionally | |

## ■ Demand value protection

Mainly used for process control. When the required current of a certain phase is greater than the setting value of actuation threshold, and it exceeds the actuation delay time (definite time-limit actuation), the circuit breaker will trip or send out an alarm signal. After that, if the required current of such phase is less than the setting value of return threshold, and it exceeds the return delay time(definite time-limit actuation), the circuit breaker will eliminate the alarm signal.
The function of required current protection can be set as ON or OFF; and when it is ON, the circuit breaker can send out an alarm signal or trip.

| | | | |
|---|---|---|---|
| Actuation threshold value (A) | (0.2~1.0) × In（Step: 2） | | |
| Actuation delay time (s) | 15~1500 （Step:1） | | |
| Return threshold value (A) | 0.2In~Start value（Step: 2） | | Only when the mode of execution is "Alarm", can this value be set, meanwhile, the start value shall be not less than the start value. |
| Return delay time (s) | 15~3000（Step:1） | | |
| Actuation or alarm characteristics (delay tolerance± 10%) | I / setting value | ≥1.1 | Definite time-limit actuation or alarm |
| | I / setting value | <0.9 | No actuation or alarm |
| Voltage imbalance alarm return characteristics (delay tolerance± 10%) | I / setting value | ≤0.9 | Return |
| | I / setting value | >1.1 | No return |
| Alarm contact output | When the mode of execution is "Alarm", "Required current protection alarm" contact output can be selected additionally | | |

## ■ Phase sequence protection

It is used in occasions that the phase sequence is required. The circuit breaker trips or sends alarm signals when it detects that phase sequence is different from action threshold and rises over the action delay (definite time operation). The function automatically quits when there is no one-phase voltage or multi-phase voltage. The function can be ON or OFF. The circuit breaker sends out alarm signals or trips when it is ON.

| | |
|---|---|
| Setting range of actuation phase sequence | △φ:A, B, C / △φ: A, C, B |
| Alarm contact output | When the mode of execution is "Alarm", "Phase sequence protection alarm" contact output can be selected additionally |

## ■ Frequency protection

- Over-frequency protection

Used for the generator protection. When the circuit frequency is greater than the setting value of actuation threshold, and it exceeds the actuation delay time(definite time-limit actuation), the circuit breaker will trip or send out an alarm signal. After that, if the circuit frequency is less than the setting value of return threshold, and it exceeds the return delay time (definite time-limit actuation), the circuit breaker will eliminate the alarm signal. The function of over-frequency protection can be set as ON or OFF; and when it is ON, the circuit breaker can send out an alarm signal or trip.

- Under-frequency protection

Used for the generator protection. When the circuit frequency is less than the setting value of actuation threshold, and it exceeds the actuation delay time(definite time-limit actuation), the circuit breaker will trip or send out an alarm signal. After that, if the circuit frequency is greater than the setting value of return threshold, and it exceeds the return delay time (definite time-limit actuation), the circuit breaker will eliminate the alarm signal.
The function of under-frequency protection can be set as ON or OFF; and when it is ON, the circuit breaker can send out an alarm signal or trip.

| | | | |
|---|---|---|---|
| Actuation threshold value (Hz) | Under-frequency | 45~return value(step:0.5Hz) | |
| | Over-frequency | Return value ~ 65(step:0.5Hz) | |
| Actuation delay time (s) | 0.1 ~ 5.0s + OFF (0.1~1s Step : 0.1s, 1~5s Step: 1s) | | |
| Return threshold value (Hz) | Under-frequency | Start value~ 65 Hz (step:0.5Hz) | Only when the mode of execution is "Alarm", can this value be set. |
| | Over-frequency | 45Hz~ start value (step:0.5Hz) | |
| Return delay time (s) | 0.2 ~ 36.0s（Step : 0.1s） | | |
| Alarm contact output | When the mode of execution is "Alarm", "Under-frequency alarm" and "Over-frequency alarm" contact outputs can be selected additionally. | | |

## ■ Inverse power protection

It is used to protect the generator. When the power is fed inversely, if the generator is running, it may damage the generator. When the flow direction of power is opposite to its set direction, as well as the power is larger than the actuation setting value of, the protection starts. The directions of frequency and incoming power line are set on the menu of “Meter setting”, and they must in accordance with practical application situations.

| | | |
|---|---|---|
| Actuation threshold value (kW) | 5~500(Step: 1) | |
| Actuation delay time (s) | 0.2~20 (Step : 0.1) | |
| Return threshold value (kW) | 5~Start value(Step : 1) | Only when the mode of execution is "Alarm", can this value be set, meanwhile, the start value shall be not less than the start value. |
| Return delay time (s) | 1.0~360 （Step : 1） | |
| Actuation or alarm characteristics (delay tolerance± 10%) | Inverse power value / setting value ≥1.1 | Definite time-limit actuation or alarm |
| | Inverse power value / setting value<0.9 | No actuation or alarm |
| Voltage imbalance alarm return characteristics (delay tolerance± 10%) | Inverse power value / setting value ≤0.9 | Return |
| | Inverse power value / setting value>1.1 | No return |
| Alarm contact output | When the mode of execution is "Alarm", "Under voltage alarm" contact output can be selected additionally | |

## ■ MCR and HSISC

Function of Making Current Release(MCR): In its closing process, or when the controller is energized for initialization, if any short-circuit fault occurs, the circuit breaker will break immediately. Actuation threshold value:10 ~100kA, step: 1kA.
Function of High Set Instantaneous Short Circuit (HSISC): In normal operation, if the short-circuit current exceeds its setting value, the circuit breaker will break instantaneously; and this function is independent of the setting value of short-circuit instantaneous protection. Actuation threshold value: 10 ~ 100kA, step: 1kA

| | | |
|---|---|---|
| MCR | Actuation threshold value | 25H/HU/HV:10kA~45kA(Step:1kA)<br>40H/HU/HV:10kA~65kA(Step:1kA)<br>63H/HU/HV:10kA~100kA(Step:1kA) |
| | Default setting value | 25H/HU/HV:30kA 40H/HU/HV:45kA<br>63H/HU/HV:75kA |
| HSISC | Actuation threshold value | OFF |
| | Default setting value | OFF |

## ■ Contact wear indication

The present situation of contact wear can be displayed on the intelligent controller panel. The factory default value is 100%, indicating that the contact is free of wear; and when the display value drops to 60%, it will send out an alarm signal to remind the user to take maintenance measures timely; after the contact is replaced, the initial wear value can be recovered by setting.

## ■ Self-diagnosis

When the microprocessor of the intelligent controller breaks down or the ambient temperature around the microprocessor surpasses 80°C±5°C, it will send alarm signal immediately.

## ■ Zone selective interlocking

Zone selective interlocking includes short-circuit interlocking and grounding interlocking. In the same loop, two or more superior to subordinate circuit breakers can realize zone selective interlocking.

☐ When short circuit or ground fault occurs on the line side(like position②) of the subordinate circuit breakers(2# ~ 4# breakers),the subordinate breakers will trip instantaneously and send zone interlocking signal to the superior circuit breakers; The superior breaker (1# breaker) receives zone interlocking trip signal and time delay according to the settings of short circuit or grounding protection. If fault current is eliminated during time delay of the superior breaker, protection returns and the superior breaker will not operate; If fault current is not eliminated after tripping of the subordinate breaker, then the superior breaker operates according to the settings of short circuit or grounding protection and cuts of fault circuit.

☐ When short-circuit or ground fault occurs between the superior breaker(1# breaker) ) and the subordinate breaker(2#~4# breakers) (like position①), the superior breaker does not receive zone interlocking signal, therefore it trips instantaneously and cuts off fault circuit instantly.

☐ Parameters setting:

- There is at least one-way DI of the superior breakers should be zone interlocking test.
- There is at least one-way DO of the subordinate breakers should be zone interlocking signal output.

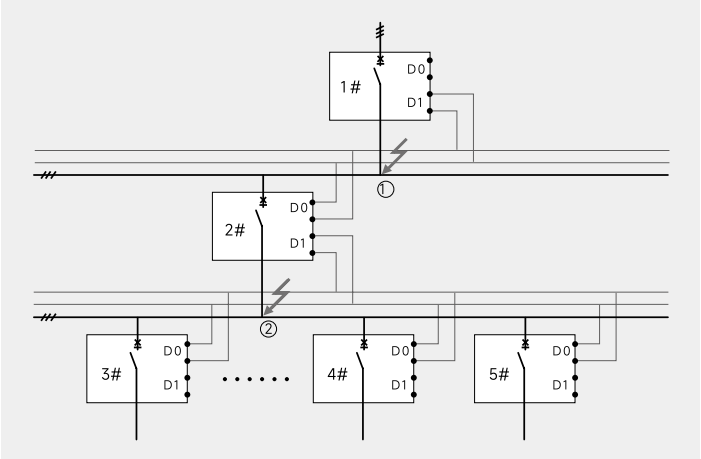

## Test trip/lock

There are three test methods for trip: they are three period of protection, grounding/leakage fault and mechanism operating time.

Three period protection test: Output analog fault current so as to know protection circumstances of the controller when simulating there occurs overload, short-circuit and instant fault.

Grounding/leakage fault test: Input analog grounding/leakage fault current so as to know protection circumstances of the controller when simulating there occurs grounding/leakage fault. It is used for check-up of operation characteristics setting values.

Mechanism operation time test: Forced magnetic flux alter actions so as to test fixed mechanical time of circuit breakers tripping.

- Remote control locking
  When locking in the state of "lock", the controller will not answer remote control command of up-level computer.
  When unlocking in the state of "unlock", the controller will answer remote control commands :OFF,ON,reset and so on of the up-level computer.
- Parameters locking
  When locking in the state of "lock", users can not modify parameters.
  When unlocking in the state of "unlock", users can modify parameters.

⚠ Before enter into "parameters locking" interface, user passwords should be input correctly.

| Test type | Three period of protectio | Grounding / Leakage faul | Operation time |
|---|---|---|---|
| Test parameter | 0A~131.0kA (Note 1) | 0A~131.0kA (Note 2) | No |
| Test control | | Start+Stop | |

*Note: 1、When In≤2000A, 0~65.5kA, step size 1A (>10kA, step size 0.1kA)*
*When In>2000A, 0~131kA , step size 2A(>10kA, step size 0.2kA)*
*2、During ground fault test, the same as note 1;*
*During leakage fault test,0~655A, when step size 0.01A(>100A , step size 1A)*

## Signal contacts output

| | | | | |
|---|---|---|---|---|
| General | Alarm | Fault trip | Self-diagnosis alarm | Load monitoring 1 |
| Load monitoring 2 | Overload pre-warnin | Overload fault | Short-delay fault | Instantaneous fault |
| Grounding / leakage fault | Grounding alarm | Current imbalance fault | Neutral line fault | Under-voltage fault |
| Over-voltage fault | Voltage imbalance fault | Under-frequency faul | Over-frequency faul | Required value fault |
| Inverse power fault | Zone interlockin | Closing | Opening | Phase sequence fault |
| MCR/HSISC faul | Grounding alarm | Short circuit interlocking | Fault of required value for A phase | Fault of required value for B phase |
| Fault of required value for C phase | Fault of required value for N phase | Required value threshold-crossing | | |

*Note: "General" means that this I/O (input/output) is not used in the controller itself, but it is available in the communication group, and can be operated by the host computer at the same time.*

| Contact default setting | | | | |
|---|---|---|---|---|
| | Contact 1 | Contact 2 | Contact 3 | Contact 4 |
| VWC4 / VWC6 | Load monitoring 1 | Load monitoring 2 | Self-diagnosis fault alarm | Fault tripping |
| VWC6(Communication) | Load monitoring 1 | Load monitoring 2 | Remote opening | Remote closing |

## Drawout type (VW3-20S/VW3-20H)

Front view

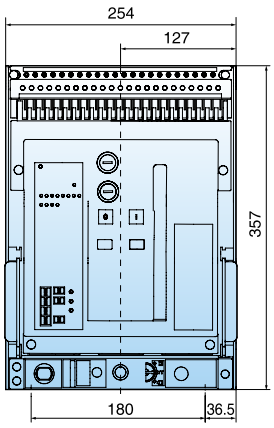


3 pole

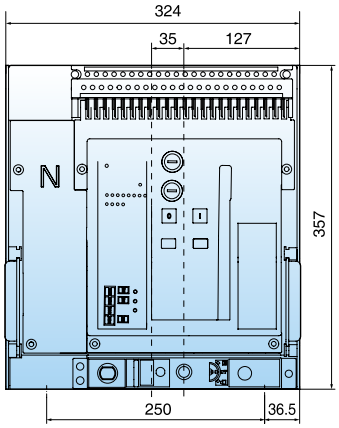


4 pole

Vertical Wiring

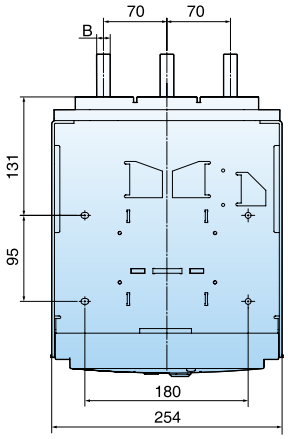


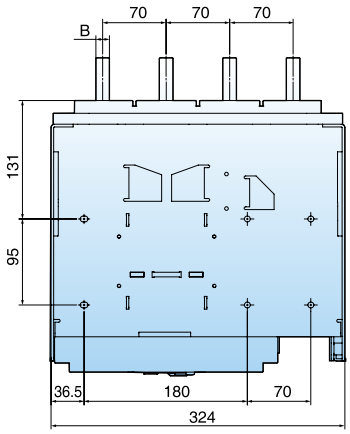


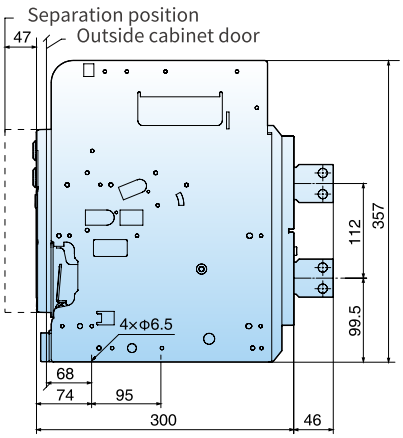


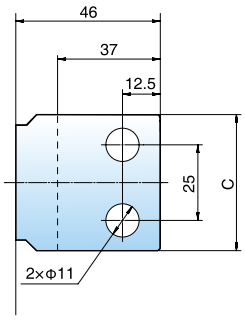

## Horizontal Wiring

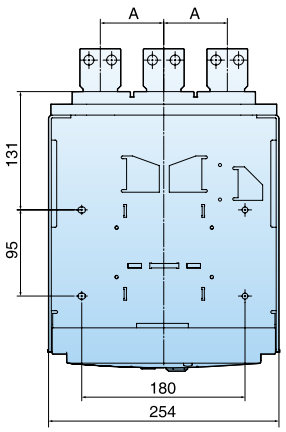


3 pole

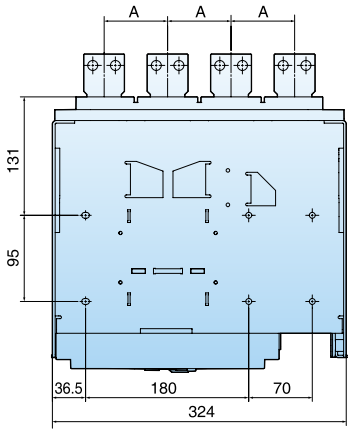


4 pole

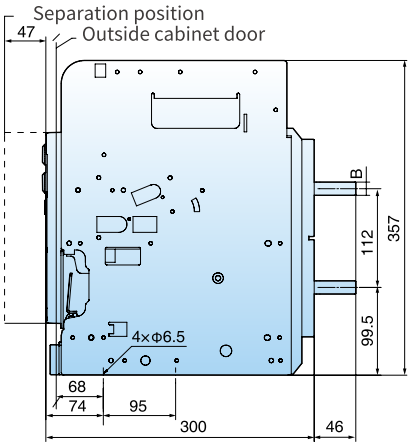


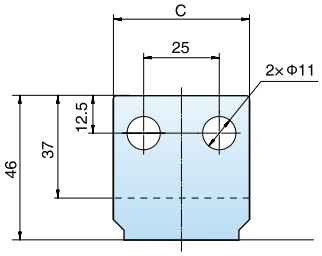


| Current | VW3-20 (200~630A) | VW3-20 (800~1250A) | VW3-20 (1600A) | VW3-20 (2000A) |
|---|---|---|---|---|
| Dimension A (mm) | 70 | 70 | 70 | 3P:85/4P:80 |
| Dimension B (mm) | 5 | 10 | 15 | 15 |
| Dimension C (mm) | 45 | 45 | 45 | 60 |

## Cabinet door open hole dimension

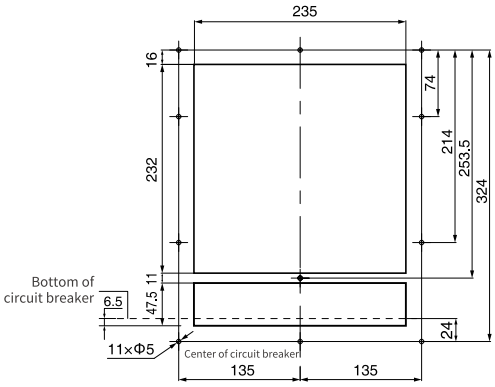


3P

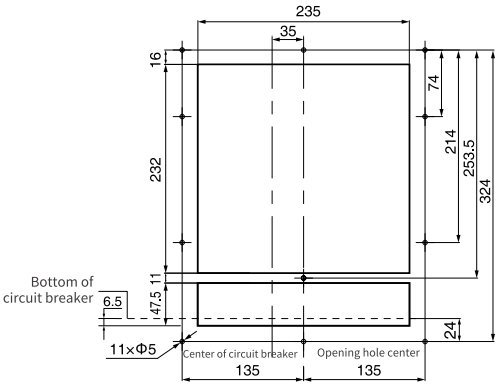


4P

## Fixed type

### Front view

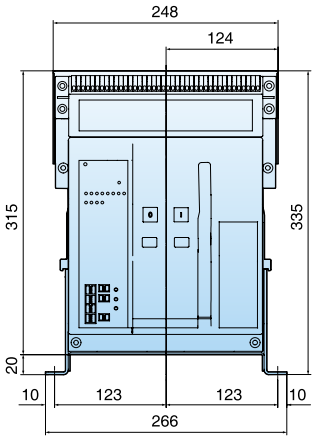


3 pole

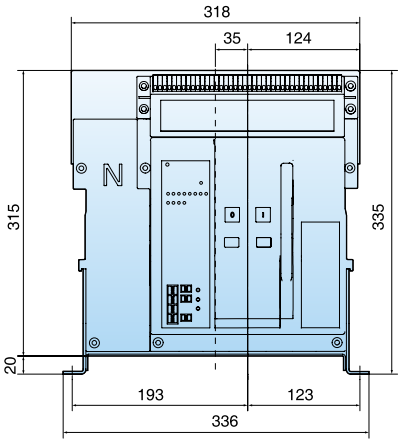


4 pole

### Vertical Wiring

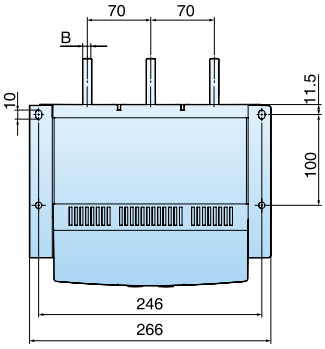


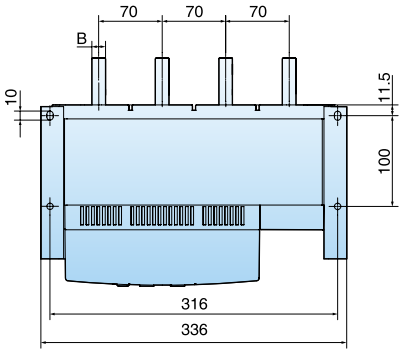


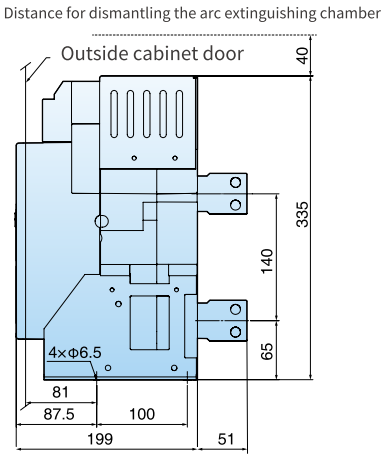


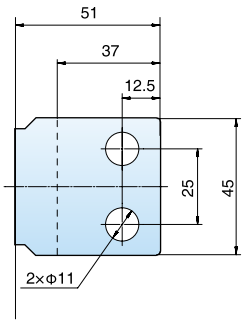

## Vertical Wiring

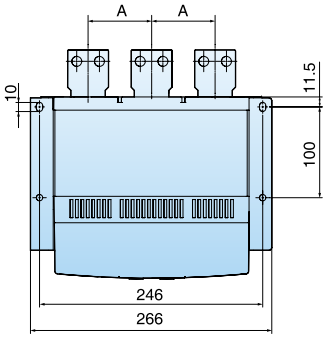


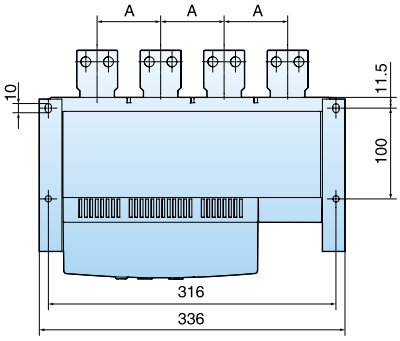


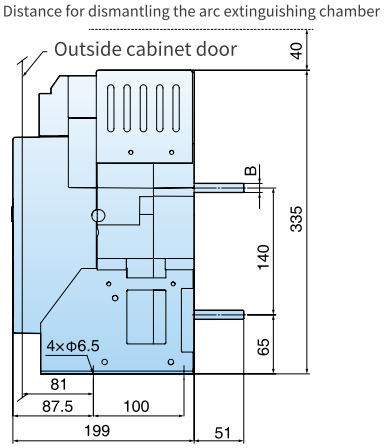


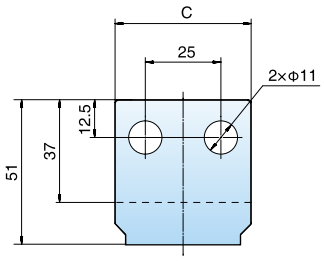


| Current | VW3-20 (200~630A) | VW3-20 (800~1250A) | VW3-20 (1600A) | VW3-20 (2000A) |
|---|---|---|---|---|
| Dimension A (mm) | 70 | 70 | 70 | 3P:85/4P:80 |
| Dimension B (mm) | 5 | 10 | 15 | 15 |
| Dimension C (mm) | 45 | 45 | 45 | 60 |

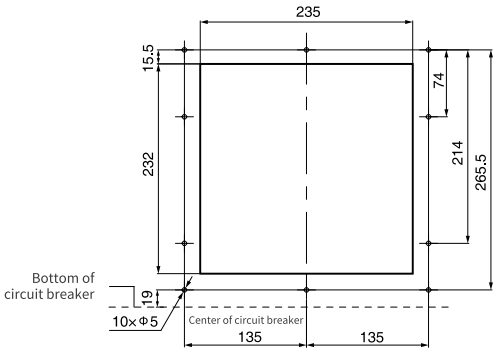


3P

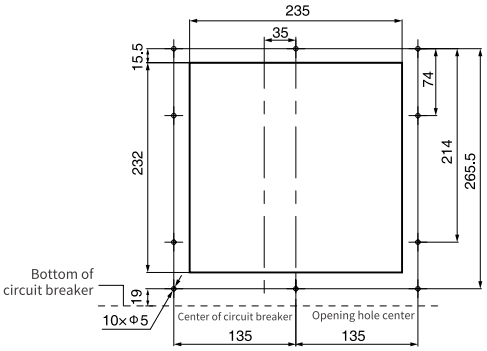


4P

## Drawout type (VW3-25H/VW3-25HU/VW3-25HV)

### Front view

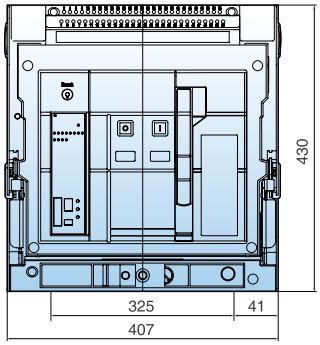


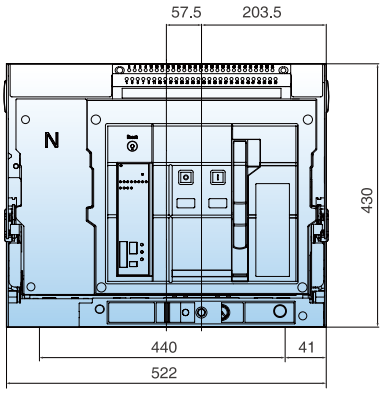


### Horizontal Wiring

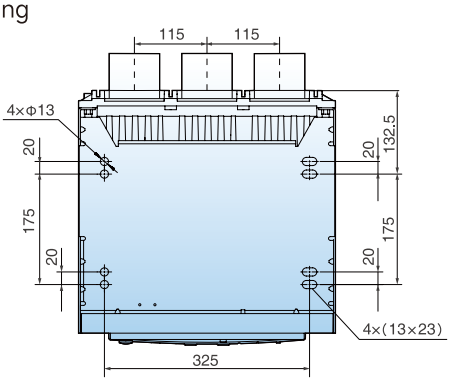


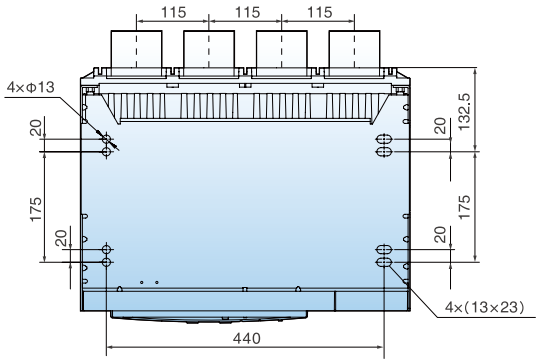


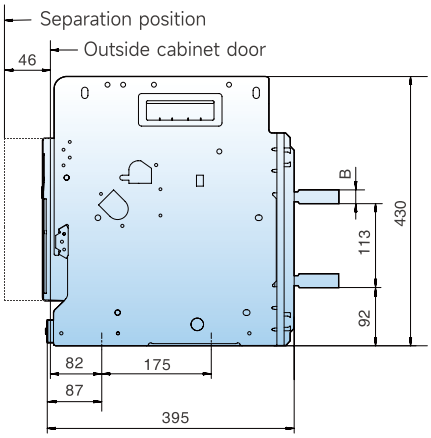


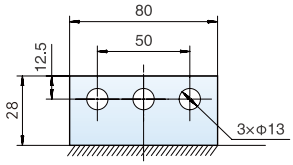


Standard

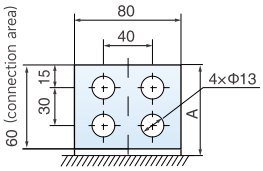


Extended

| Current | VW3-25H (630 ~ 1600A) | VW3-25H (2000 ~ 2500A) |
|---|---|---|
| Dimension A(mm) | 65 | 75 |
| Dimension B(mm) | 10 | 20 |

### Cabinet door open hole dimension

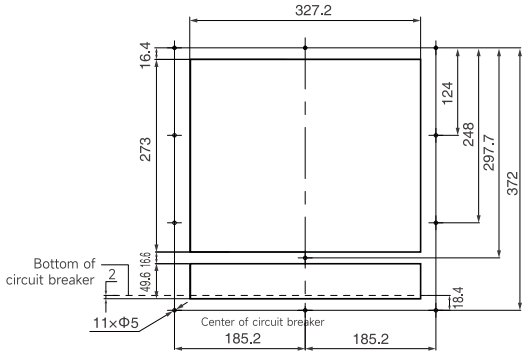


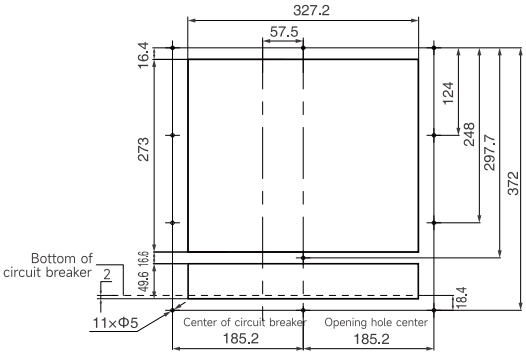


3P

4P

## Fixed type

### Front view

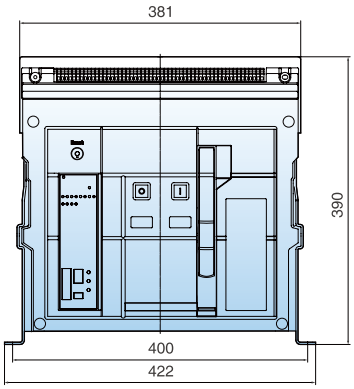


3 pole

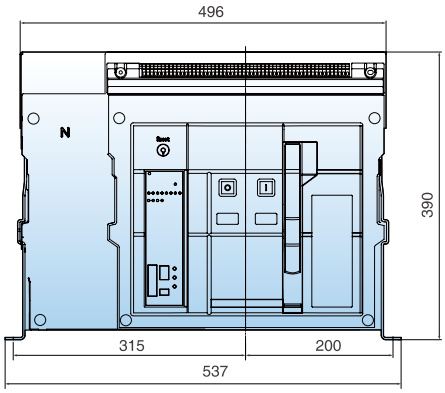


4 pole

### Horizontal Wiring

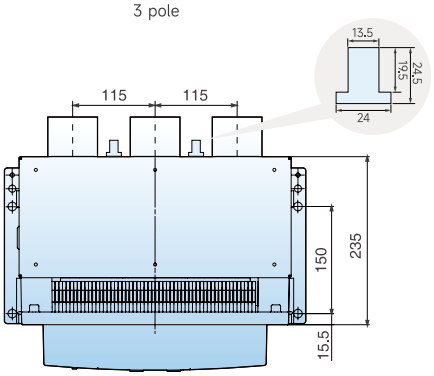


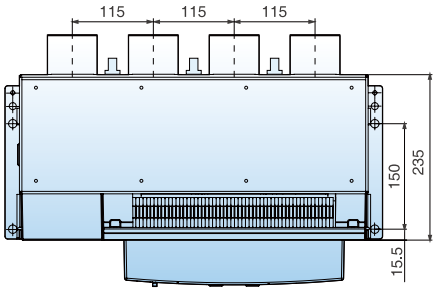


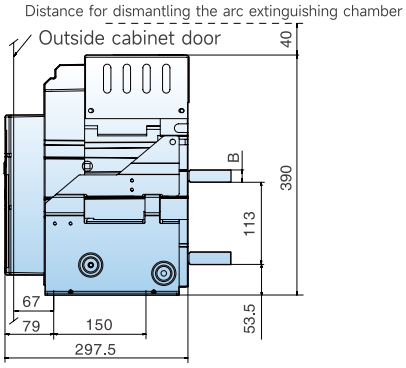


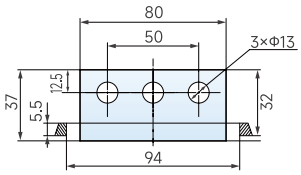


Standard

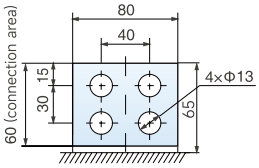


Extended

| Current | VW3-25H (630 ~ 1600A) | VW3-25H (2000 ~ 2500A) |
|---|---|---|
| Dimension B(mm) | 10 | 20 |

### Cabinet door open hole dimension

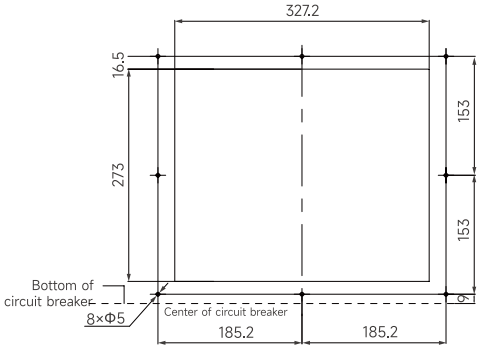


3P

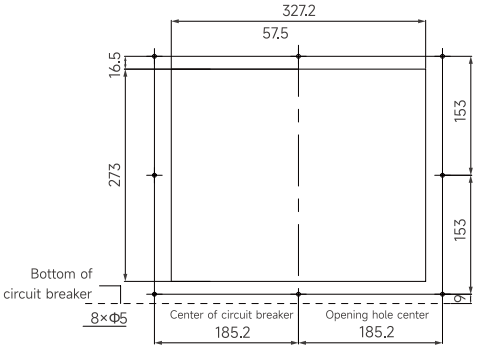


4P

## Drawout type (VW3-40H/VW3-40HU/VW3-40HV, 1000 ~ 3200A)

Front view

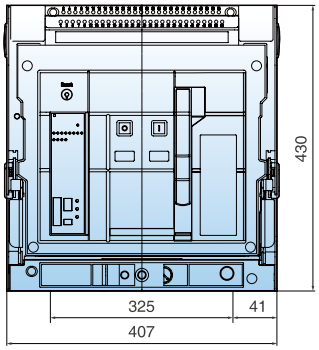


3 pole

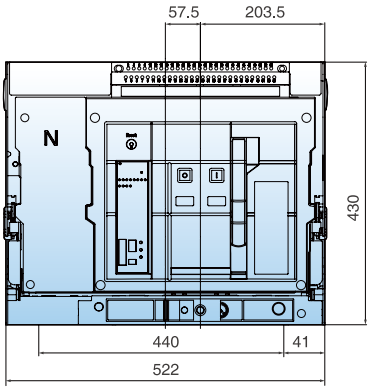


4 pole

Vertical Wiring

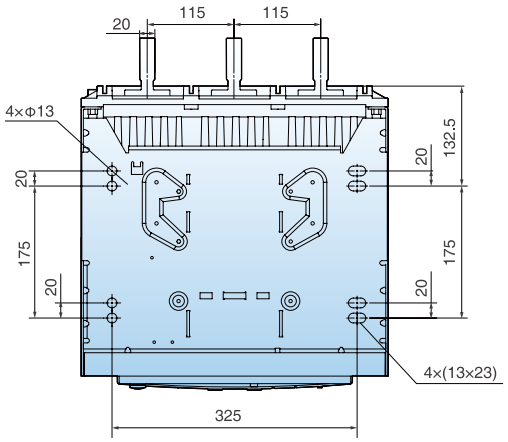


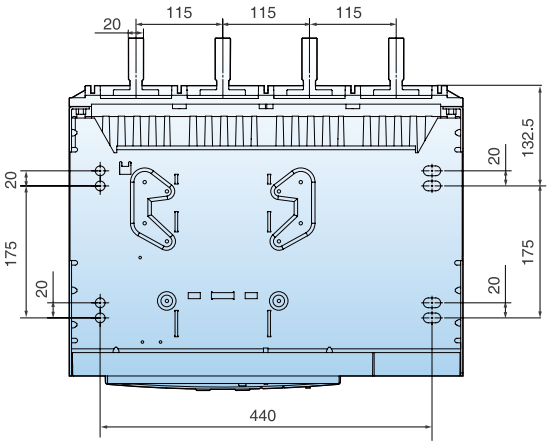


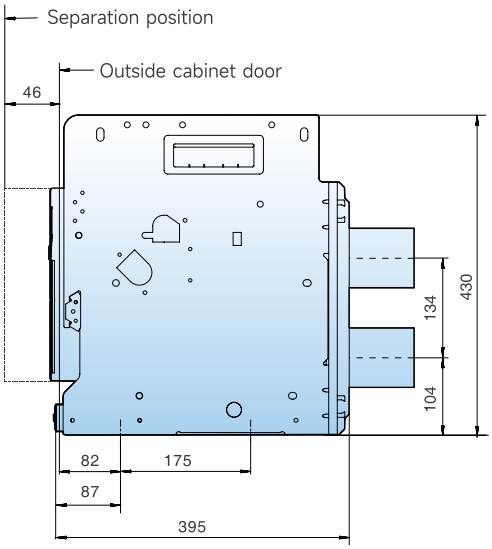


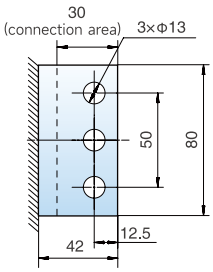


Standard

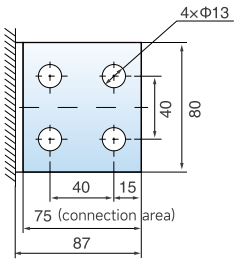


Extended

## Horizontal Wiring

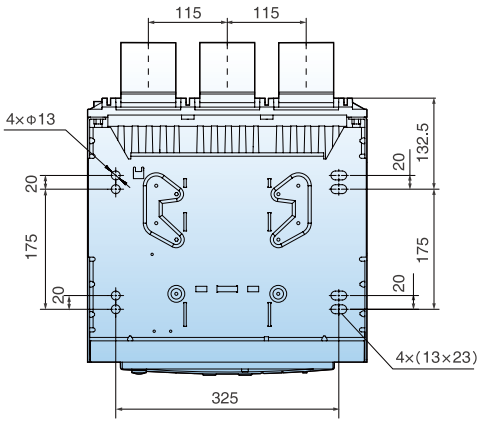


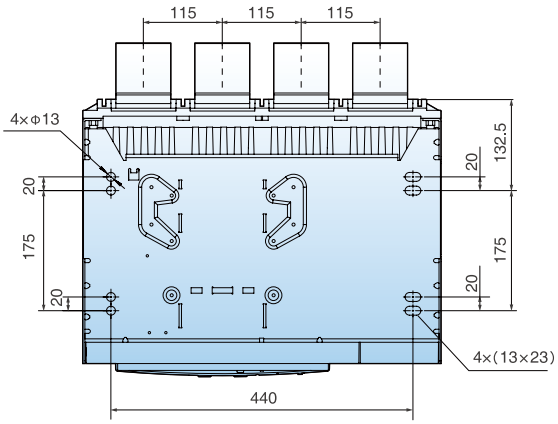


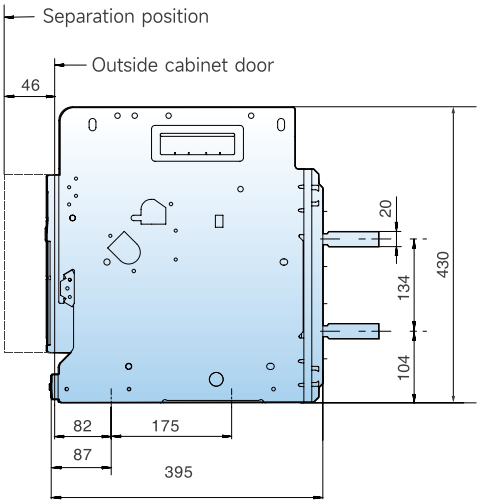


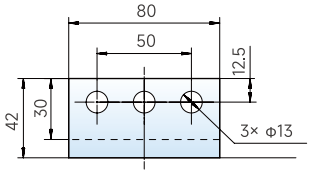


Standard

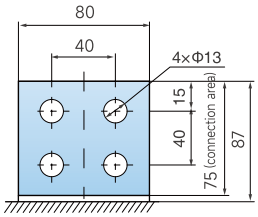


Extended

## Cabinet door open hole dimension

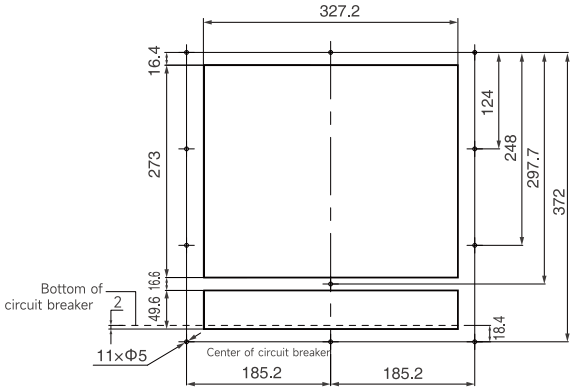


3P

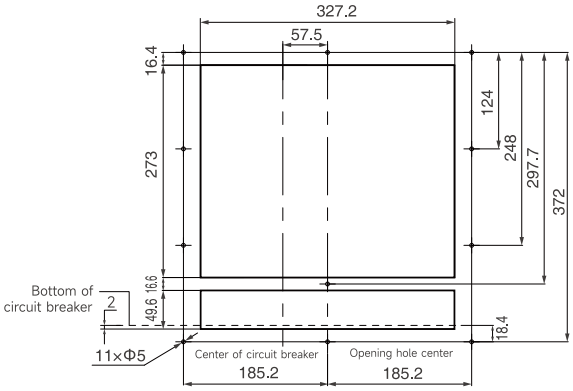


4P

## Drawout type (VW3-40H/VW3-40HU/VW3-40HV, 3600 ~ 4000A)

Front view

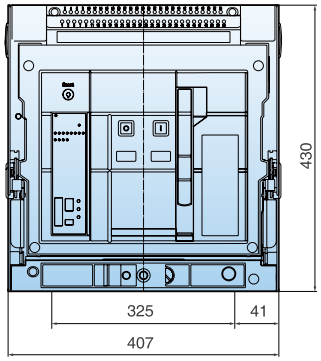


3pole

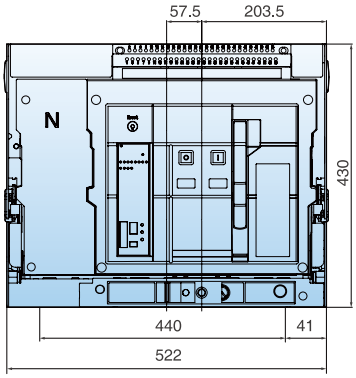


4pole

Vertical Wiring

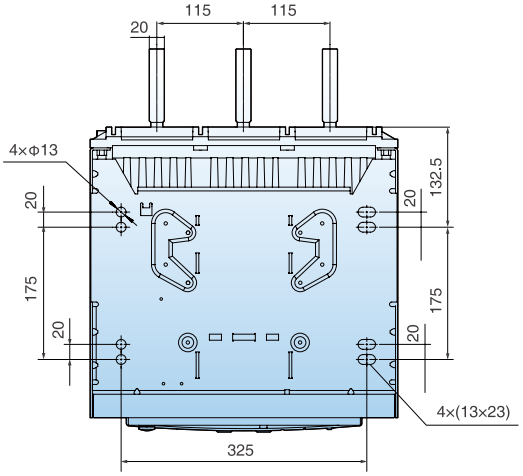


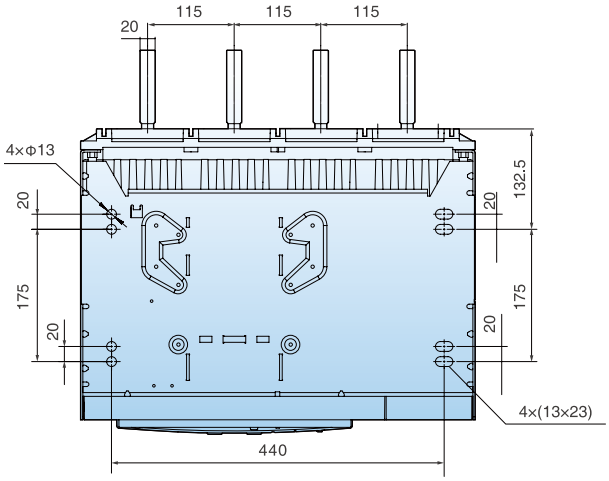


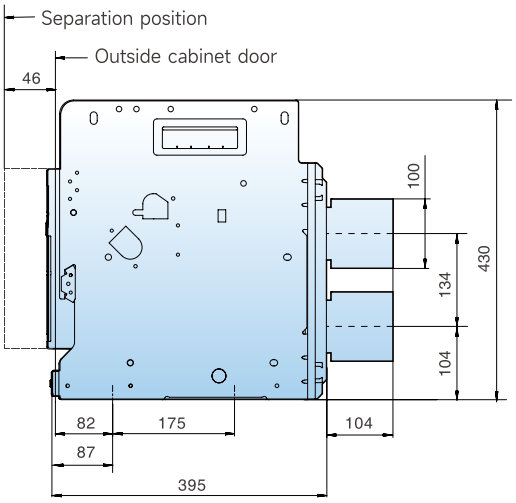


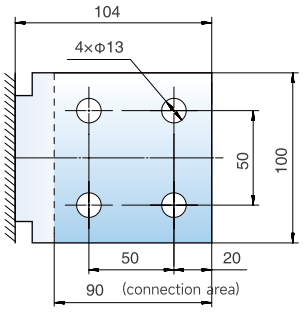

## Horizontal Wiring

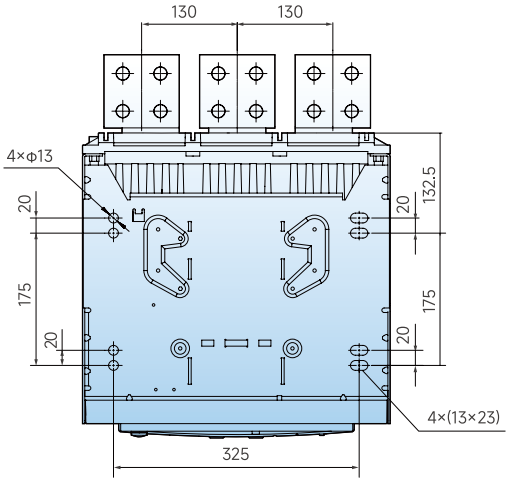


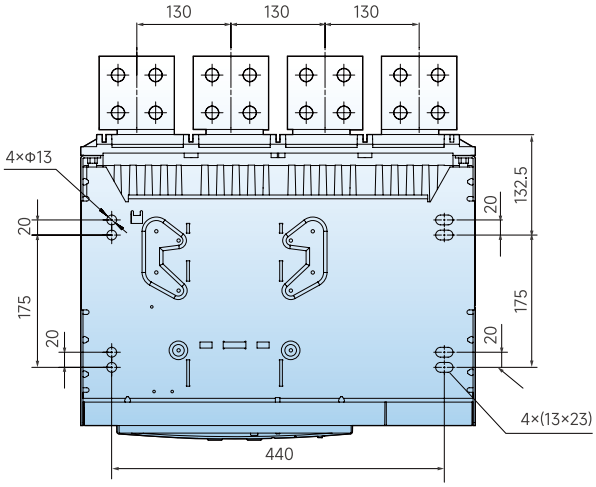


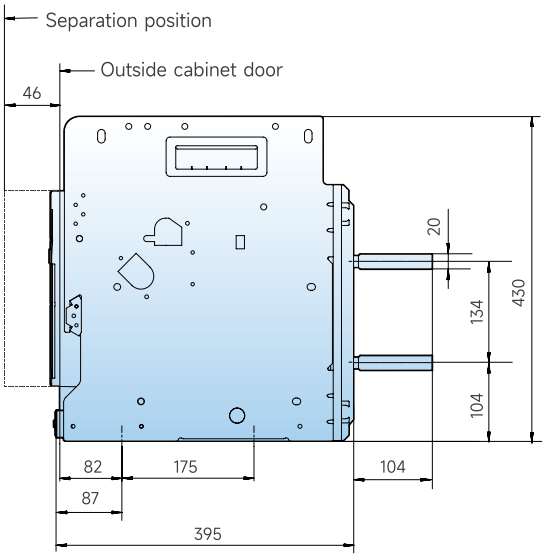


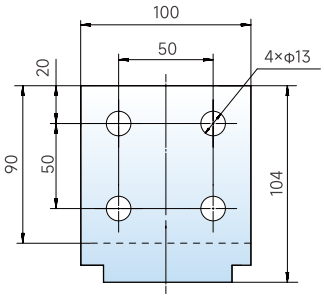


## Cabinet door open hole dimension

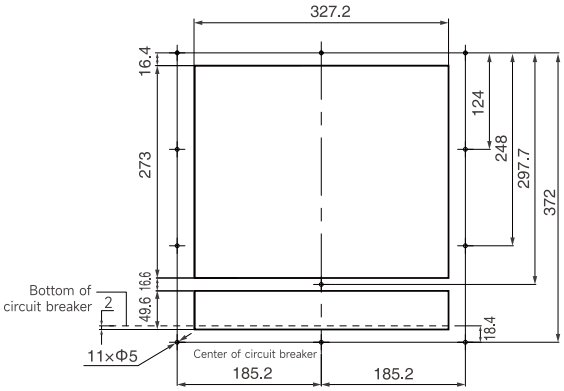


3P

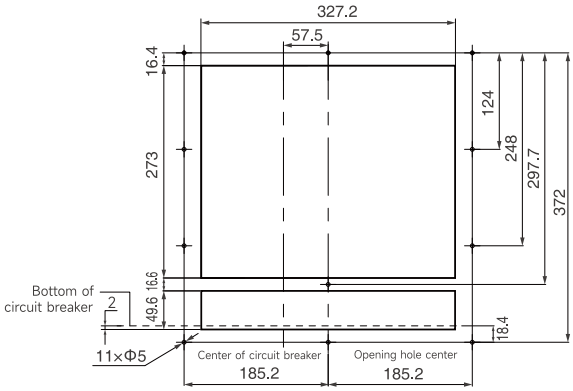


4P

## Fixed type (VW3-40H/VW3-40HU/VW3-40HV, 1000 ~ 3200A)

Front view

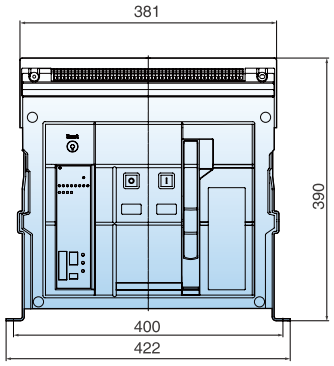


3pole

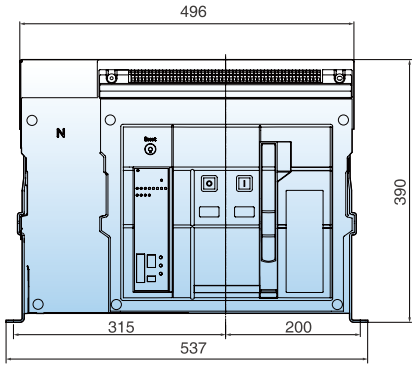


4pole

Vertical Wiring

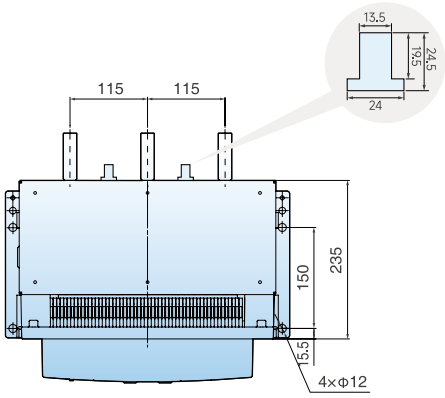


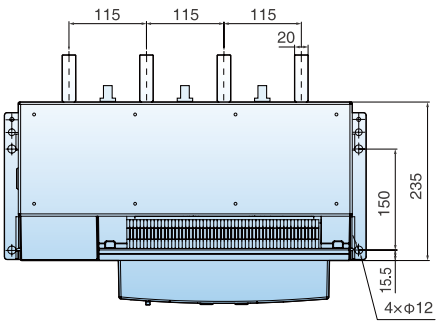


Distance for dismantling the arc extinguishing chamber

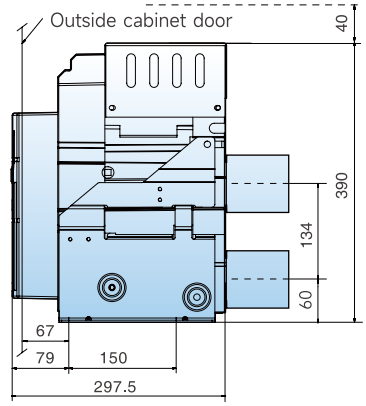


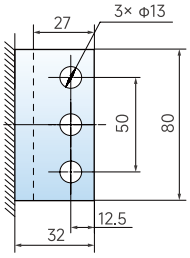


Standard

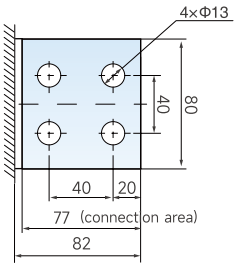


Extended

## Horizontal Wiring

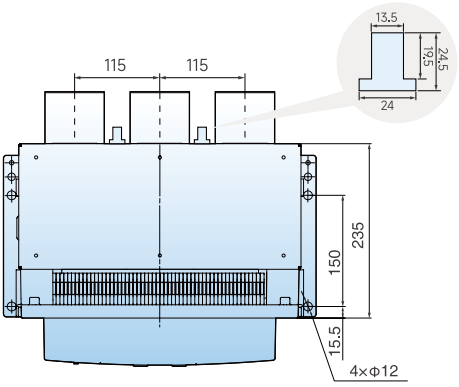


3pole

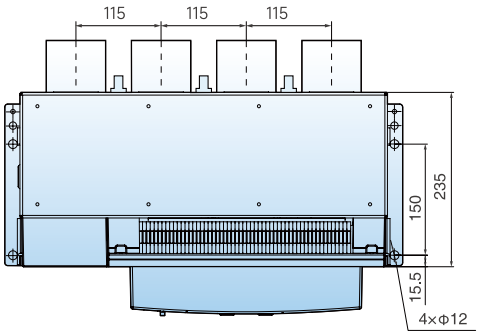


4pole

Distance for dismantling the arc extinguishing chamber

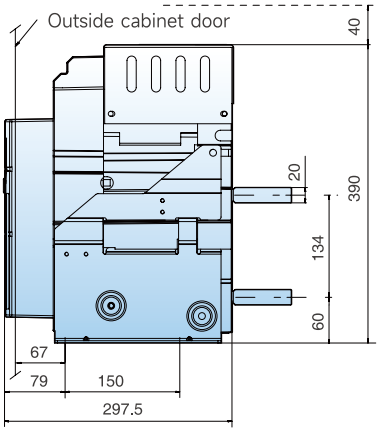


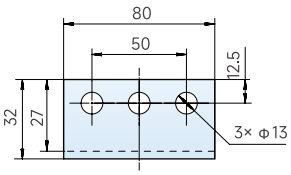


Standard

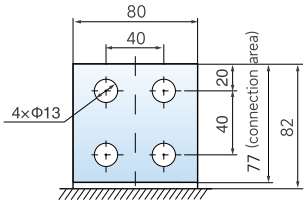


Extended

## Cabinet door open hole dimension

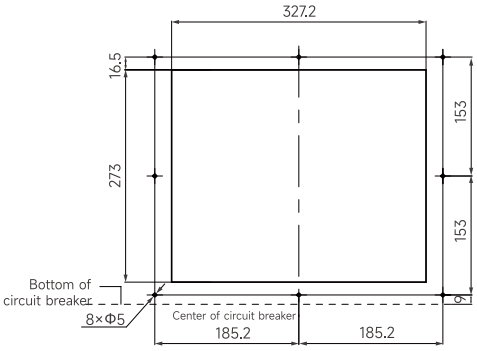


3P

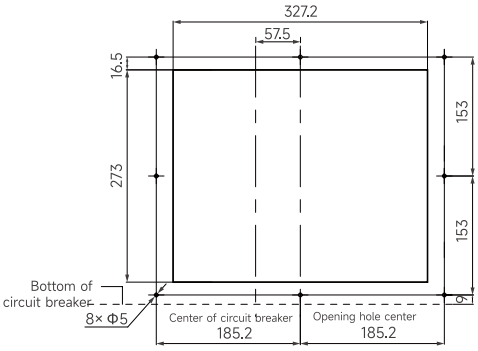


4P

## Fixed type (VW3-40H/VW3-40HU/VW3-40HV, 3600 ~ 4000A)

Front view

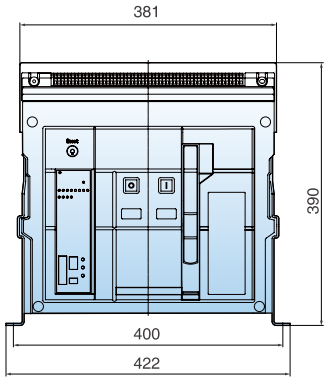


3pole

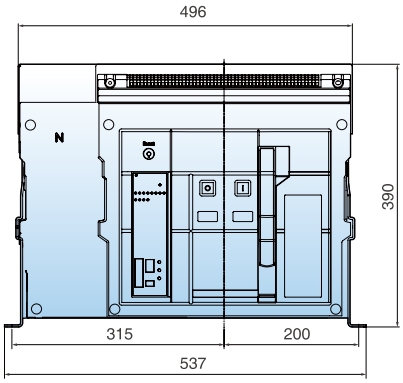


4pole

Vertical Wiring

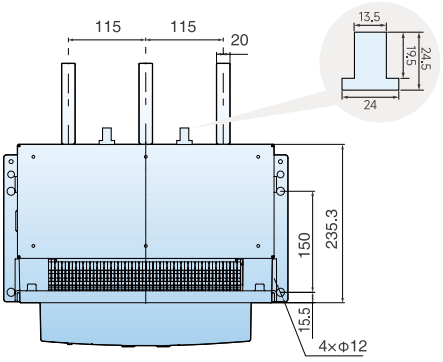


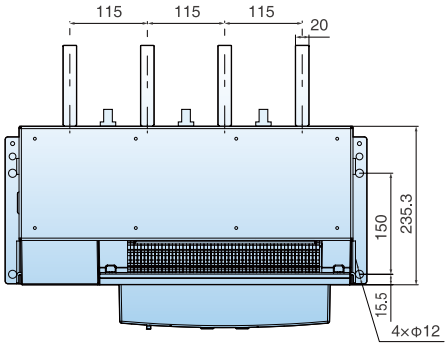


Distance for dismantling the arc extinguishing chamber

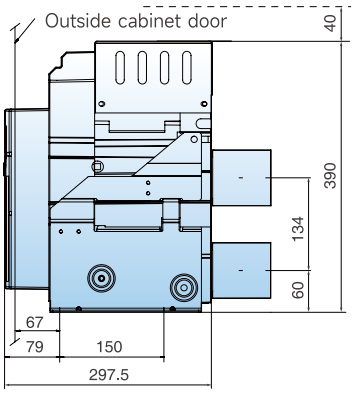


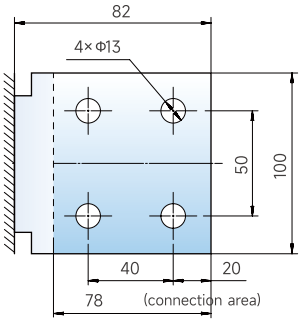

## Horizontal Wiring

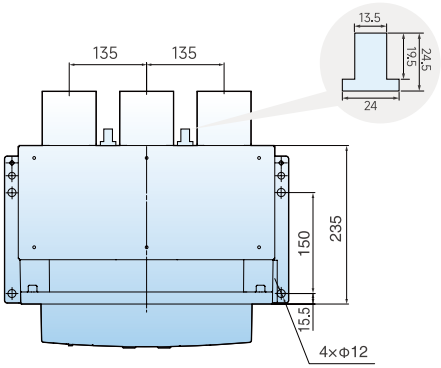


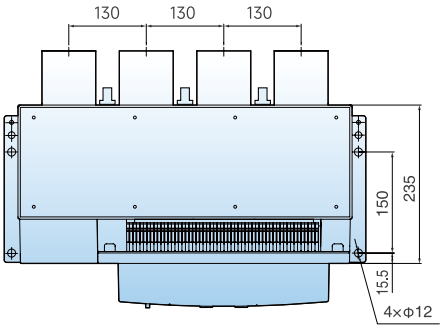


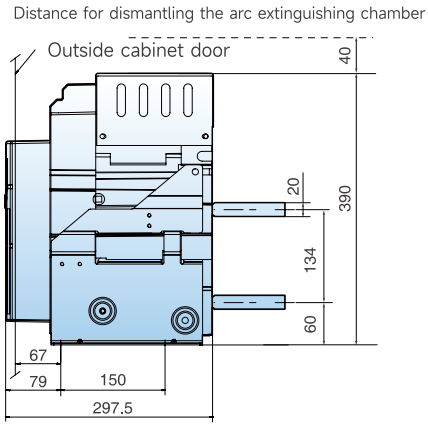


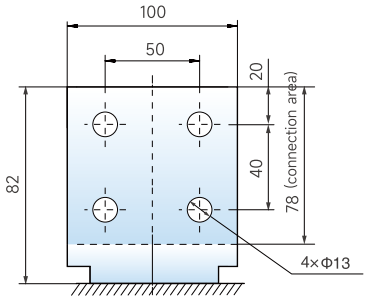


## Cabinet door open hole dimension

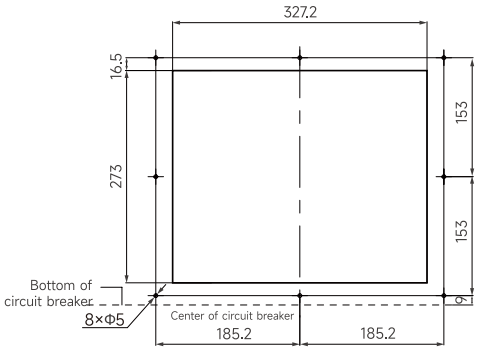


3P

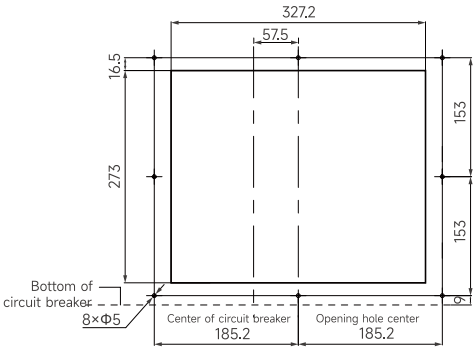


4P

## Drawout type (VW3-63H/VW3-63HU/VW3-63HV, 4000 ~ 5000A)

Front view

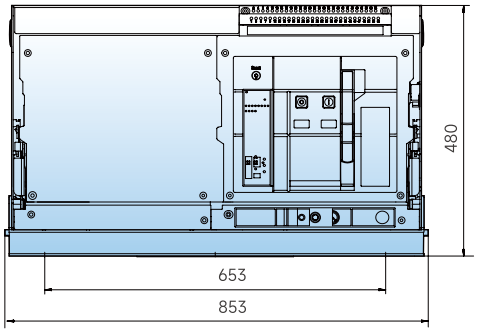


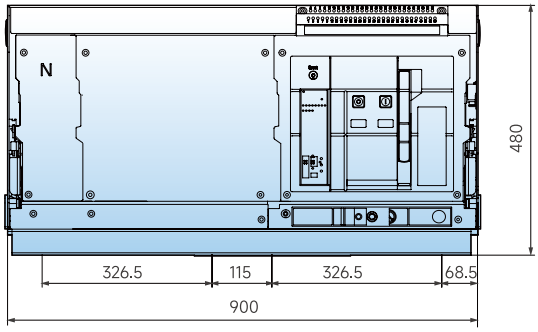


Horizontal Wiring

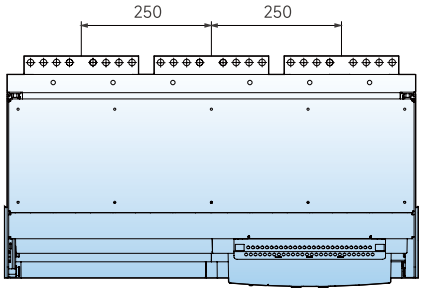


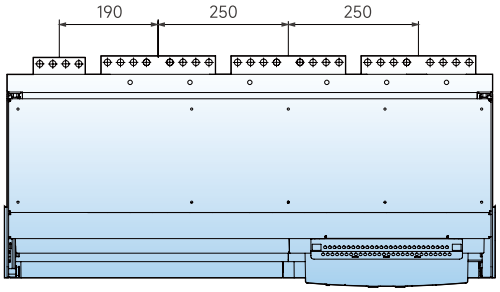


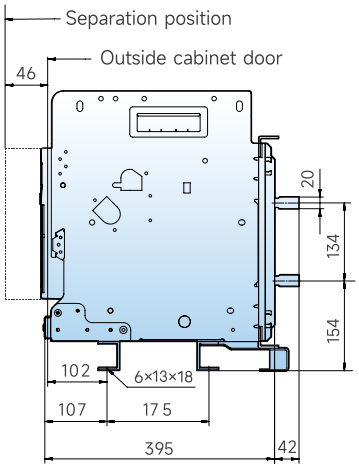


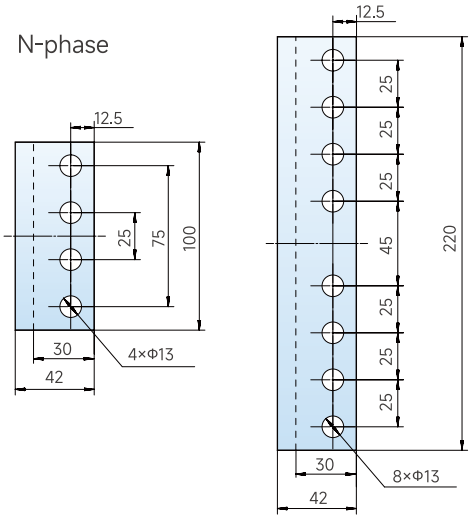

## Drawout type (VW3-63H/VW3-63HU/VW3-63HV, 6300A)

Front view

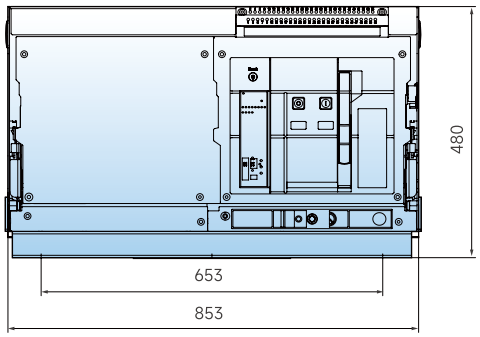


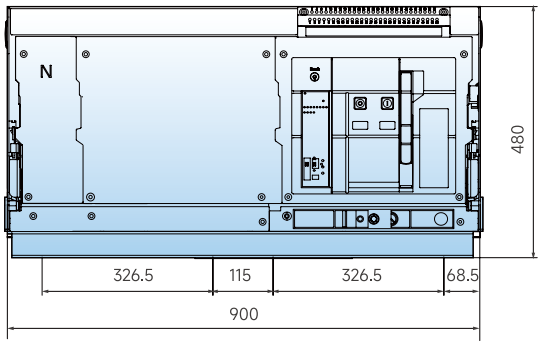


Horizontal Wiring

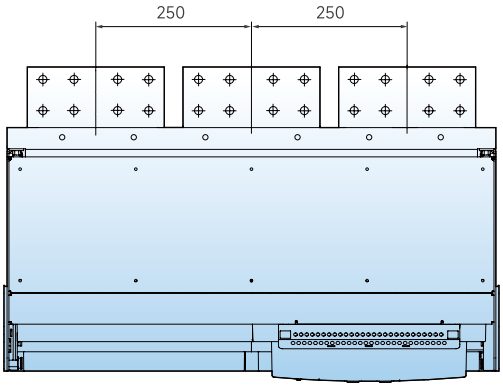


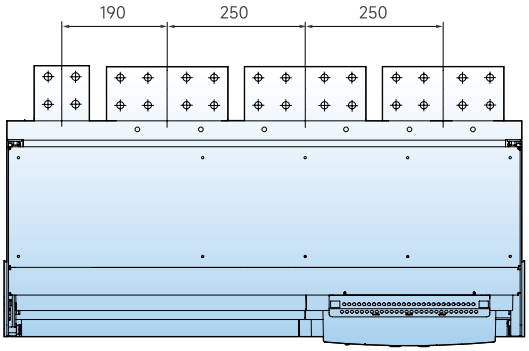


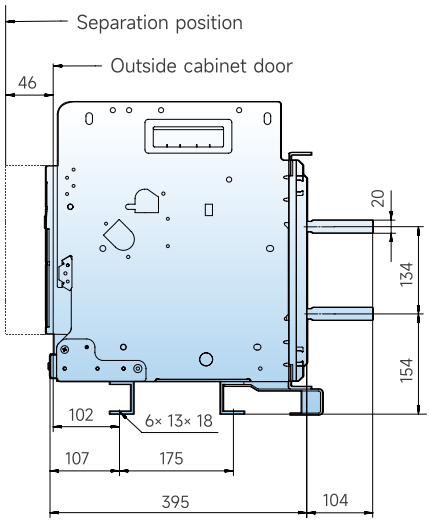


N-phase

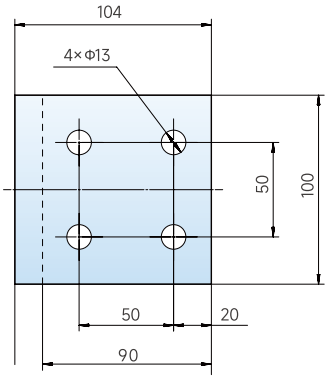


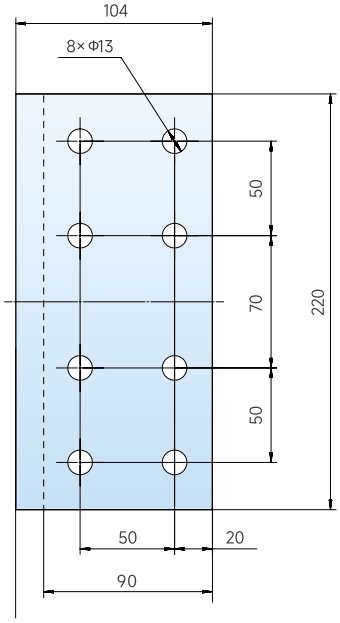

## Fixed type (VW3-63H/VW3-63HU/VW3-63HV, 4000~5000A)

Front view

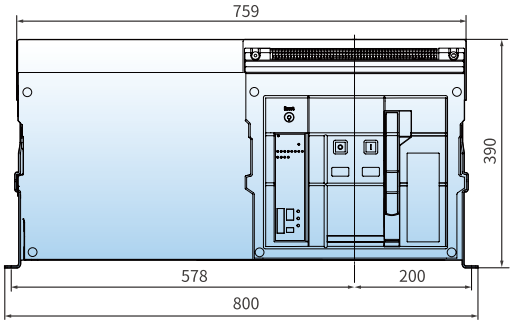


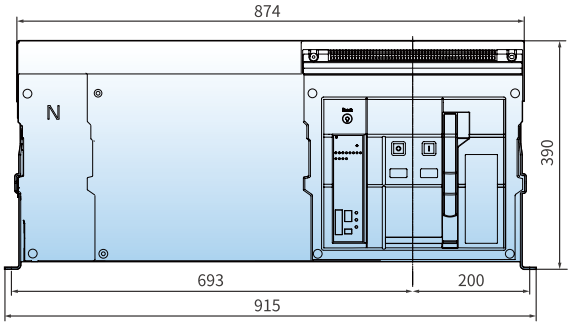


## Horizontal Wiring

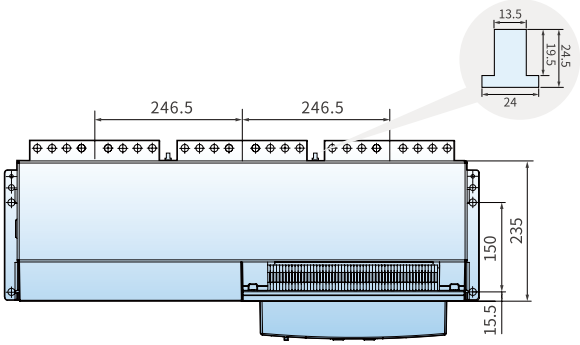


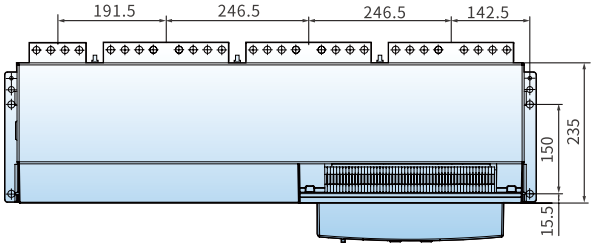


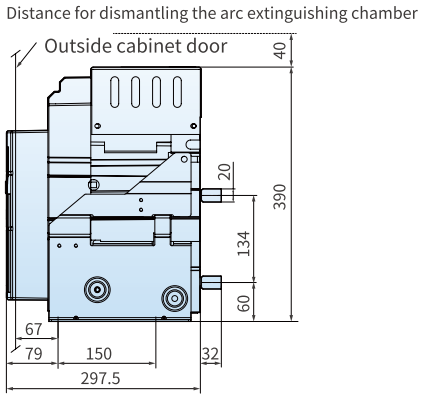


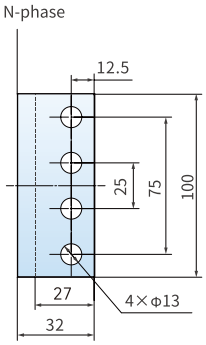


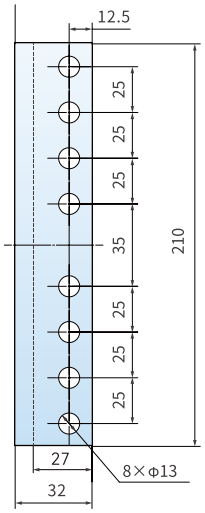

## Fixed type (VW3-63H/VW3-63HU/VW3-63HV, 6300A)

Front view

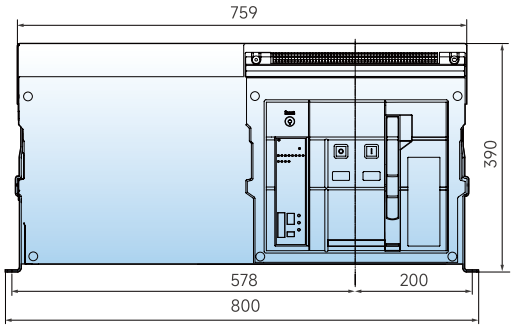


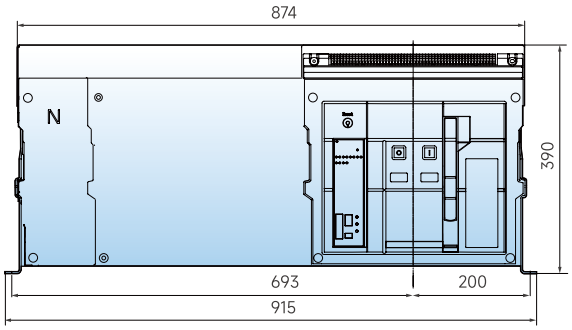


## Horizontal Wiring

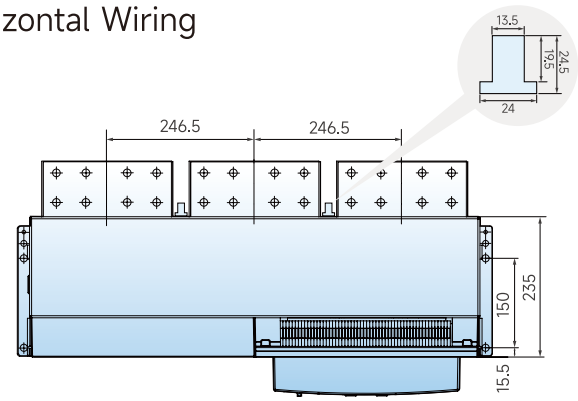


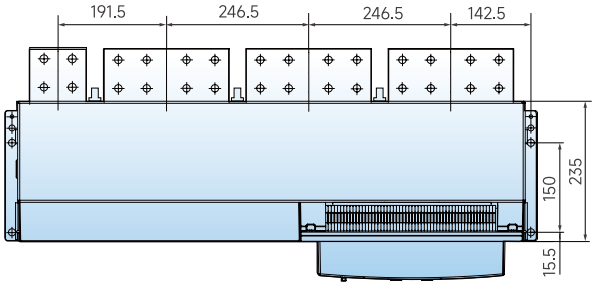


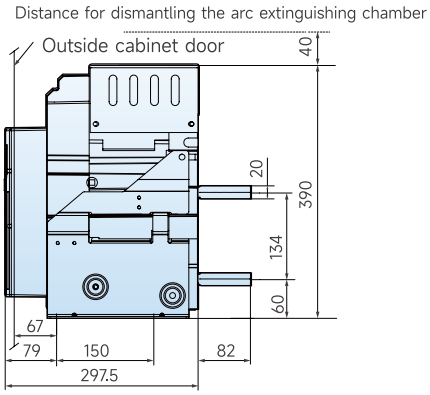


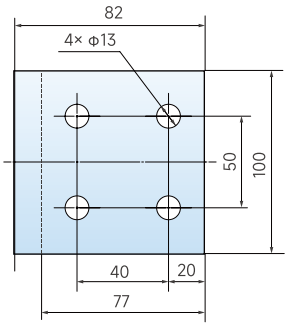


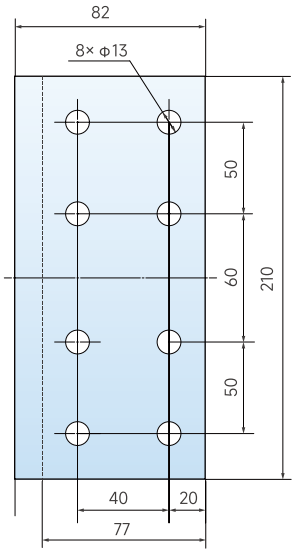

## VW3-63H/VW3-63HU/VW3-63HV Cabinet door open hole dimension

Cabinet door open hole dimension Fixed type

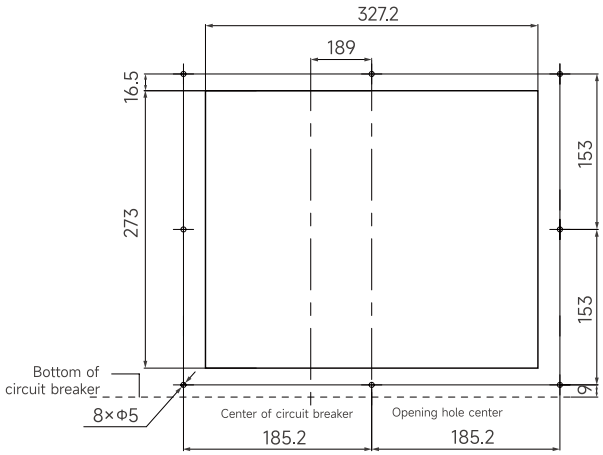


3P

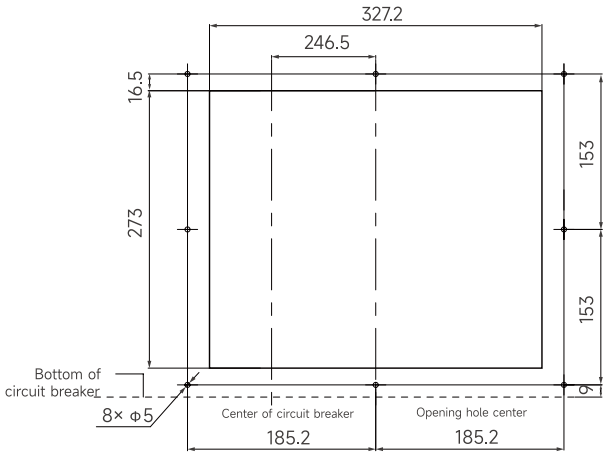


4P

Cabinet door open hole dimension Drawout type

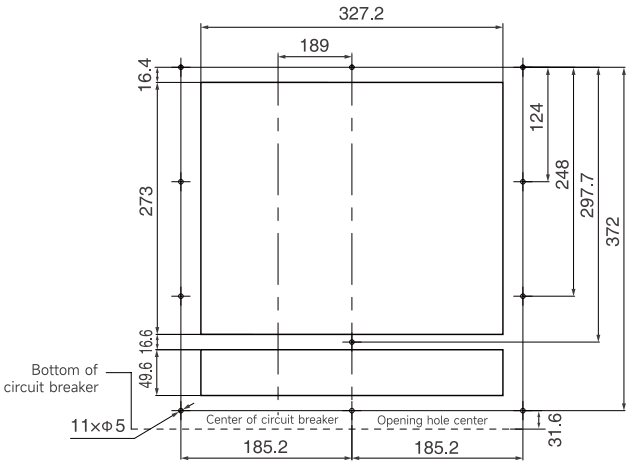


3P

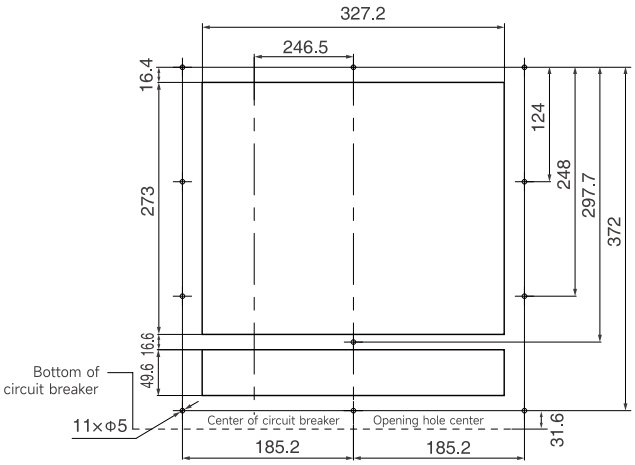


4P

When users install the circuit breaker into the cabinet, the safe distance between the circuit breaker and the cabinet is shown in the figure below, and the installation dimensions are shown in the table below.

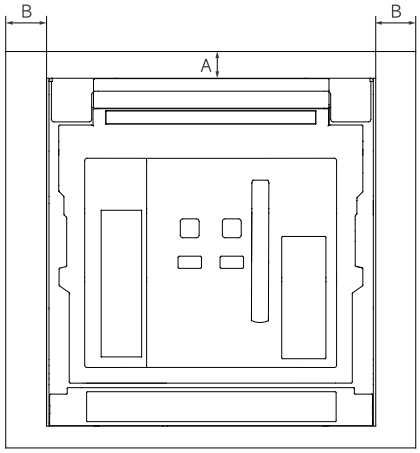


Drawout type circuit breaker

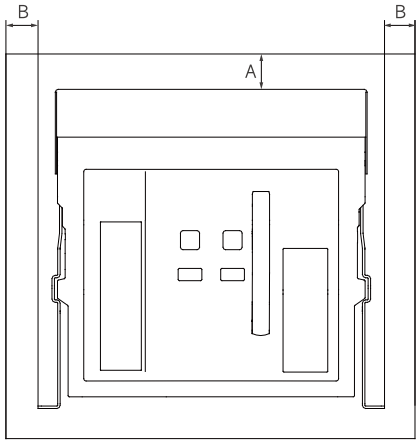


Fixed type circuit breaker

unit: mm

| Installation type of | To the insulator | | To the metallic body grounded safely | | To the live part | |
|---|---|---|---|---|---|---|
| | A | B | A | B | A | B |
| Drawout type | 0 | 0 | 0 | 0 | 60 | 60 |
| Fixed type | 0 | 0 | 0 | 0 | 60 | 60 |

Note: 1. The safety distance of the fixed circuit breaker should consider the space required to remove the arc extinguishing chamber of 150mm;

## VW3-20(S/H)

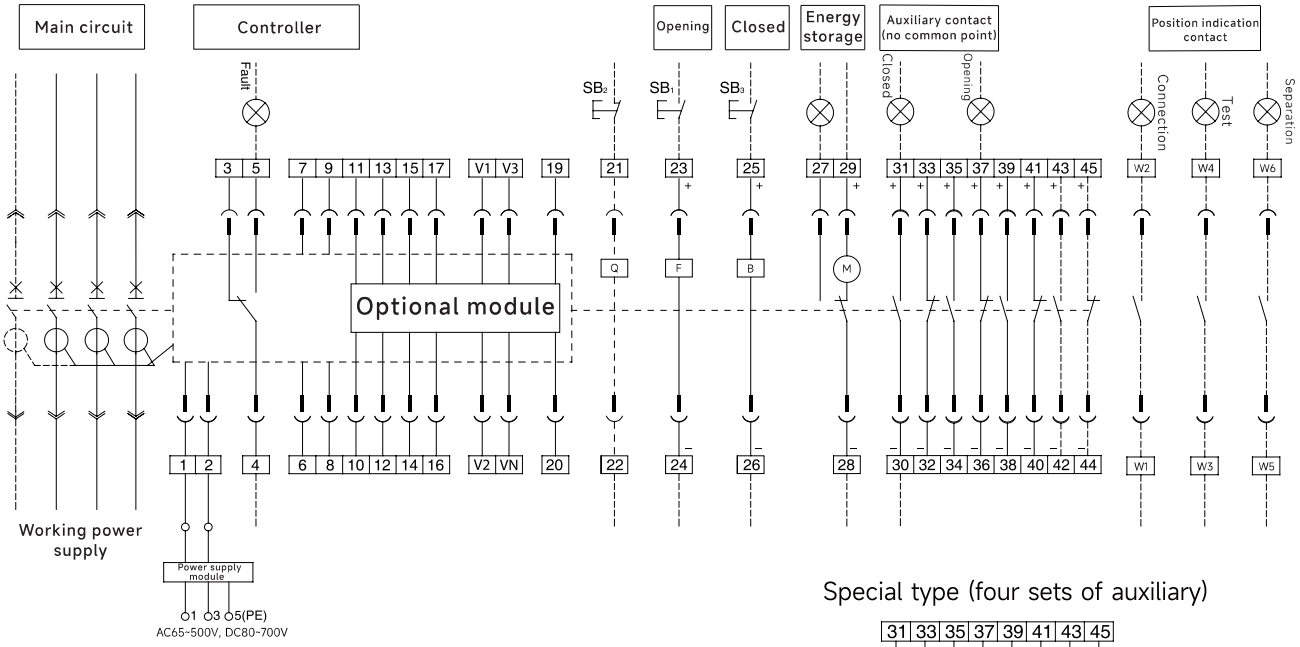


Special type (four sets of auxiliary)

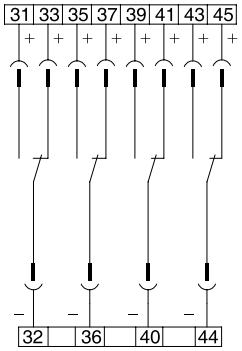


***Note:*** ***SB1*** *Shunt button* ***SB3*** *Close button*
***F*** *Shunt release* ***B*** *Closed electromagnet*
***M*** *Motor operating mechanism*

### Terminal Number

| | | | |
|---|---|---|---|
| 1#, 2# | Working power supply | 21#, 22# | Under-voltage release or loss of voltage release |
| 3#, 4#, 5# | Fault tripping contact output | 23#, 24# | Shunt release |
| 6#, 7# | External transformer or external leakage current transformer | 25#, 26# | Closed electromagnet |
| 8#, 9# | Communication | 27#, 28#, 29# | Motor operating mechanism |
| 10#, 11# | First contact output | 30#~45# | Auxiliary contact |
| 12#, 13# | Second contact output | V1 | A-phase wiring (input voltage ≤ 230V) |
| 14#, 15# | Third contact output | V2 | B-phase wiring (input voltage ≤ 230V) |
| 16#, 17# | Fourth contact output | V3 | C-phase wiring (input voltage ≤ 230V) |
| 19# | Communication shielded grounding wire | VN | N-phase wiring |
| 20# | PE-phase wiring | | |

*Note: (1) Position contact terminal numbers W1 # -W6 # do not connect the secondary terminal*
*(2)If the control power supply voltage of F, B and M is different, cconnect to different power sources separately*
*(3)Terminals 29 # (VW3-20S/VW3-20H) can be directly connect to the power supply (automatic pre energy storage), or can be connect to the power supply after the normally open button (manual pre energy storage)*
*(4)Indicator light, button switch are provided by user*
*(5)Select the contact output function according to the "DO Function Setting Table" on page 42*
*(6)The above circuit diagrams is the circuit breaker in the open position.*
*(7)The shunt release coil is of the long-term energized type and defaults to the pulse type. If choose to maintain type coil, please contact the manufacturer.*
*(8)When connecting the auxiliary contact to a load, please keep the load in the same position and direction as the auxiliary contact, otherwise it may cause the auxiliary contact to burn out Do not connect the normally closed contacts of this machine in series with the closed coil, otherwise it will cause anti bounce failure.*

## With communication function

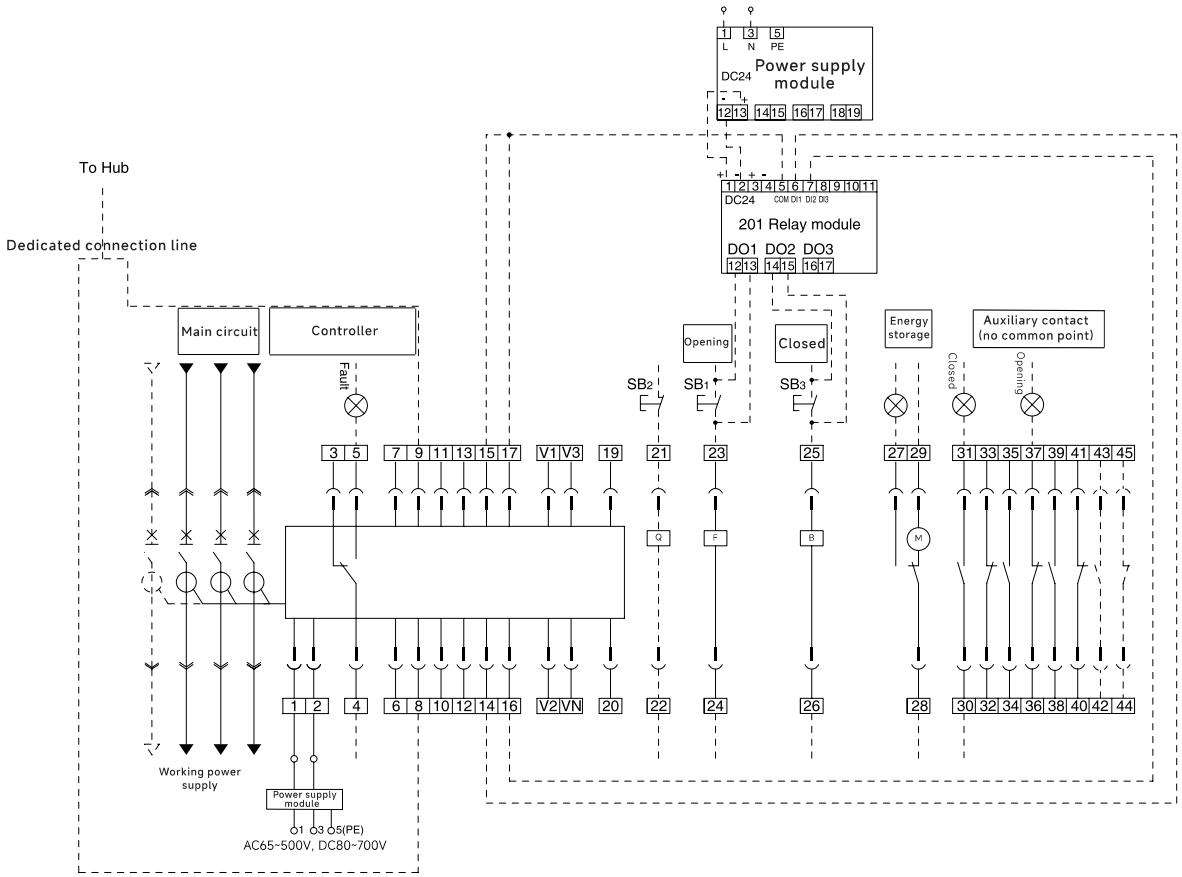


***Note:*** ***SB1*** *Shunt button* ***SB3*** *Close button* ***F*** *Shunt release*
***B*** *Closed electromagnet* ***M*** *Motor operating mechanism*

### Terminal Number

| | | | |
|---|---|---|---|
| 1#, 2# | Working power supply | 21#, 22# | Under-voltage release or loss of voltage release |
| 3#, 4#, 5# | Fault tripping contact output | 23#, 24# | Shunt release |
| 6#, 7# | External transformer or external leakage current transformer | 25#, 26# | Closed electromagnet |
| 8#, 9# | Communication | 27#, 28#, 29# | Motor operating mechanism |
| 10#, 11# | First contact output | 30#~45# | Auxiliary contact |
| 12#, 13# | Second contact output | V1 | A-phase wiring (input voltage ≤ 230V) |
| 14#, 15# | Third contact output | V2 | B-phase wiring (input voltage ≤ 230V) |
| 16#, 17# | Fourth contact output | V3 | C-phase wiring (input voltage ≤ 230V) |
| 19# | Communication shielded grounding wire | VN | N-phase wiring |
| 20# | PE-phase wiring | | |

*Note: (1) Position contact terminal numbers W1 # -W6 # do not connect the secondary terminal*
*(2)If the control power supply voltage of F, B and M is different, cconnect to different power sources separately*
*(3)Terminals 29 # (VW3-20S/VW3-20H) can be directly connect to the power supply (automatic pre energy storage), or can be connect to the power supply after the normally open button (manual pre energy storage)*
*(4)Indicator light, button switch are provided by user*
*(5)Select the contact output function according to the "DO Function Setting Table" on page 42*
*(6)The above circuit diagrams is the circuit breaker in the open position.*
*(7)The shunt release coil is of the long-term energized type and defaults to the pulse type. If choose to maintain type coil, please contact the manufacturer.*
*(8)When connecting the auxiliary contact to a load, please keep the load in the same position and direction as the auxiliary contact, otherwise it may cause the auxiliary contact to burn out Do not connect the normally closed contacts of this machine in series with the closed coil, otherwise it will cause anti bounce failure.*

## VW3-25(H/HU/HV), VW3-40(H/HU/HV), VW3-63(H/HU/HV)

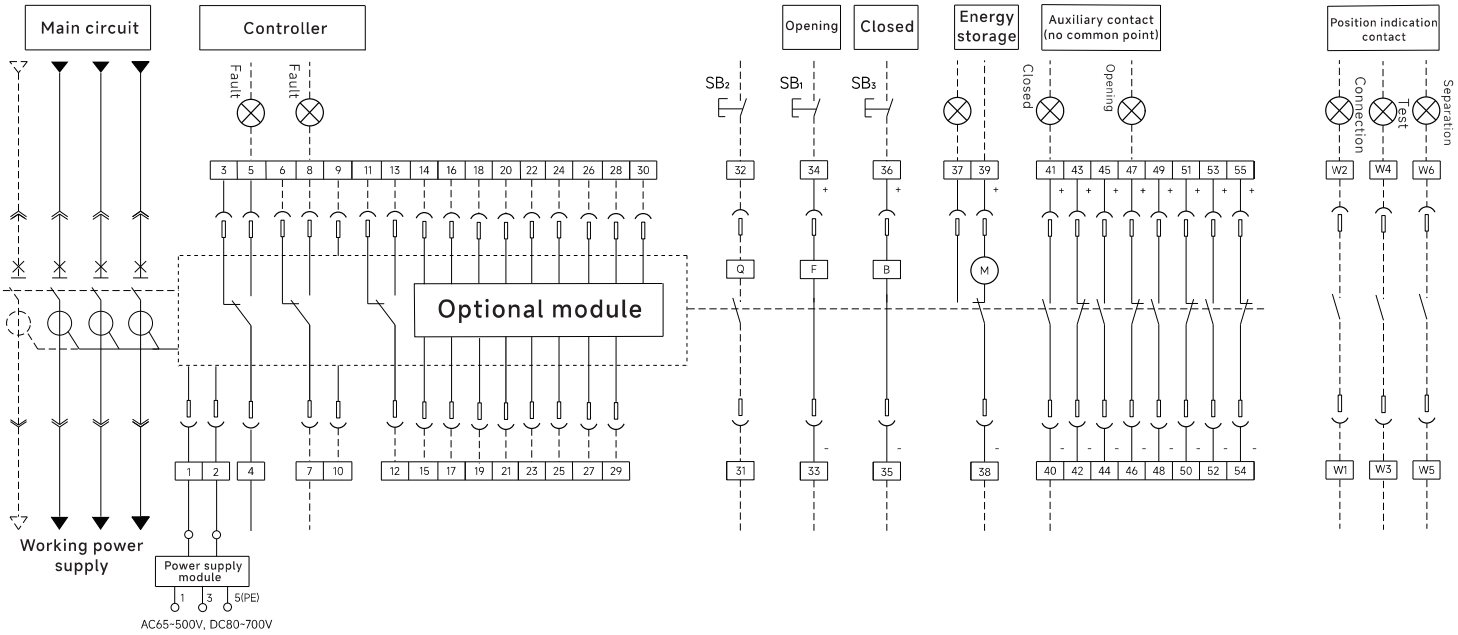


## With communication function

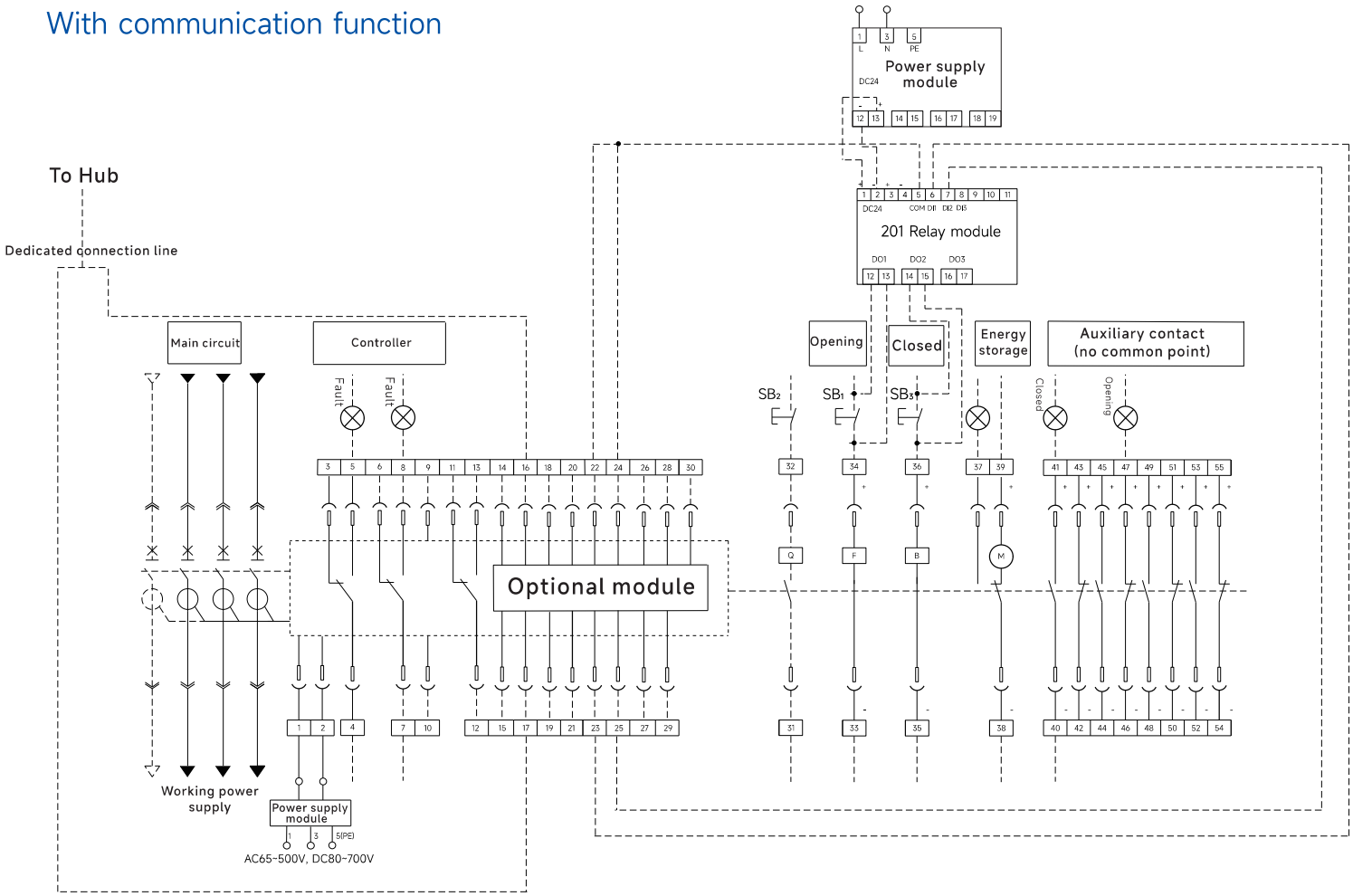

## Special (four sets of auxiliary)

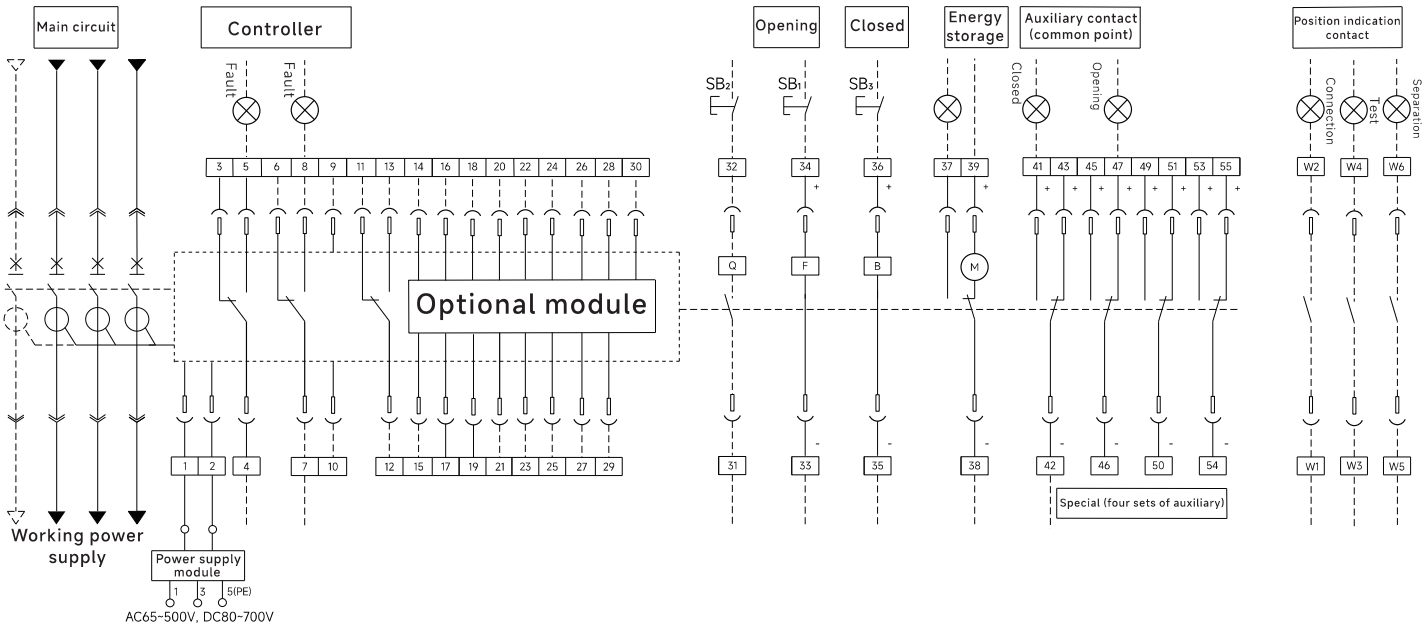


***Note:*** ***SB1*** *Shunt button* ***SB3*** *Close button* ***F*** *Shunt release* ***B*** *Closed electromagnet* ***M*** *Motor operating mechanism*

### Terminal Number

| | | | |
|---|---|---|---|
| 1#, 2# | Working power supply | 26# | A-phase wiring (input voltage ≤ 230V) |
| 3#, 4#, 5# | Fault tripping contact output 1 | 27# | B-phase wiring (input voltage ≤ 230V) |
| 6#, 7#, 8# | Fault tripping contact output 2 | 28# | C-phase wiring (input voltage ≤ 230V) |
| 9#, 10# | Remote reset | 29# | N-phase wiring |
| 11#, 12#, 13# | Close ready signal output unit | 30# | PE-phase wiring |
| 14#, 15# | External transformer or external leakage current transformer | 31#, 32# | Under-voltage release or loss of voltage release |
| 16#, 17# | Communication | 33#, 34# | Shunt release |
| 18#, 19# | First contact output | 35#, 36# | Closed electromagnet |
| 20#, 21# | Second contact output | 37#, 38#, 39# | Motor operating mechanism |
| 22#, 23# | Third contact output | 40#~55# | Auxiliary contact |
| 24#, 25# | Fourth contact output | | |

***Note:*** *(1) Position contact terminal numbers W1 # -W6 # do not connect the secondary terminal*
*(2)If the control power supply voltage of F, B and M is different, cconnect to different power sources separately*
*(3)Terminals 39 # (VW3-25H/VW3-40H/VW3-63H) can be directly connect to the power supply (automatic pre energy storage), or can be connect to the power supply after the normally open button (manual pre energy storage)*
*(4)Indicator light, button switch are provided by user*
*(5)Select the contact output function according to the "DO Function Setting Table" on page 42*
*(6)The above circuit diagrams is the circuit breaker in the open position.*
*(7)The shunt release coil is of the long-term energized type and defaults to the pulse type. If choose to maintain type coil, please contact the manufacturer.*
*(8)When connecting the auxiliary contact to a load, please keep the load in the same position and direction as the auxiliary contact, otherwise it may cause the auxiliary contact to burn out Do not connect the normally closed contacts of this machine in series with the closed coil, otherwise it will cause anti bounce failure.*

## Installation employment warnings

In order to guarantee your personal and electric equipment safety, before the circuit breaker put into operation, user must do like the following:

- Before installing and using the circuit breaker, work instructions must be read.
- The circuit breaker must be put into use in normal operating conditions.
- Before installment, whether the specifications of the breaker meet the operational requirenments should be checked. Before installment, firstly 500V megger should be used to measure the insulation resistance of the breaker. In the ambient air temperature 20°C ±5°C and relative humidity 50%-70%, the insulation resistance should not less than 500MΩ
- When installing the breaker,be sure that the installation surface is in horizontal position and fixed by bolt.
- When installing, please notice that there is no conductive foreign material falling into the breaker.
- When installing,conductive busbar connected to the breaker when connecting should be smooth without any additional mechanical stress.
- When installing,reliable protective grounding should be done with the breaker and there is obvious grounding symbol on grounding.
- After installing the breaker, the following operational experiments should be done before energizing main circuit. Make sure that everything is normal and then it can be energized.
  - ▫ You should check carefully whether there is foreign material falling into the breaker, It must be completely cleared if there is some and the breaker should keep clean.
  - ▫ Secondary loop should be connected properly according to relevant wiring,and checking whether the operating mechanism, controller,closing coil, shunt release and so on is in line with actual power supply voltage, and then secondary loop can be energized.
  - ▫ After storing energy of electrical operating mechanism, press ON button(electrical or manual)and the breaker will be closed.
  - ▫ Pressing OFF button (electrical or manual), the breaker should be opened.
  - ▫ Using the lest function of the intelligent controller to let the breaker open reliably, RESET button should be pressed after testing.
  - ▫ When storing energy manually, pull the handle on the front-end panel up and down,and the panel will show"charging" after operating seven times.Energy-storage is completed when you hear"click".

Only when all the above tests are proved to be normal, the breaker can be put into operation!!!

## Maintenance

- Every rotaing part should be infused with lubrication oil periodically during using.
- Dust should be cleaned periodically so as to keep good insulation level of the breaker.
- Contacts system should be checked periodically you should check it after short circuit current breaking.

Contents to be checked:

- Whether the arc chute is in good condition
- Whether the contacts have good contact
- Whether fasteners of every connection part are in good connection

The following chart allow you to determine the cause of fault and the elimination method.
If no matter how to do, fault is still there, please contact us, we will provide you with advice or troubleshoot for you.

| Serial Number | syndrome | The possible reasons | Elimination method |
|---|---|---|---|
| 1 | Circuit breaker automatically disconnect<br>(reset button to highlight) | ■Overload fault tripping ("$I_{r1}$" lights)<br>■Short circuit fault tripping ("$I_{sd}$" lights or "$I_i$" lights)<br>■ Ground fault tripping ("$I_g$" lights) | ☐ According to the controller of the fault type and fault current, check out the fault lines, press the red reset button, and then the circuit breaker closing |
| 2 | Circuit breaker closed, disconnect immediately<br>(reset button not highlight) | ■ Shunt release power supply always exist<br>■ Institutional fault | ☐ Check the line<br>☐ Contact our company maintenance |
| 3 | Circuit breaker closed, immediately disconnect, The reset button pop-up | ■ Short circuit when closed<br>■ The transient current is too big when closed<br>■ Intelligent controller fault | ☐ Removal of fault, back before use, check the status of the circuit breaker<br>☐ Improve the power grid or the setpoint of the control unit, back before use, check the status of the circuit breaker<br>☐ Contact our company maintenance |
| 4 | Can't closed circuit breaker remote<br>( press the closing button on the switch body can be closed ) | ■ The power supply of closing coil is shortage<br>■ A fault in the line<br>■ Closing coil fault | ☐ Check the power supply (voltage is normal)<br>☐ Check whether the line is correct<br>☐ The first two under the condition of normal, may be a component failure, contact our company maintenance |
| 5 | Can't electric energy storage (but can hand machine) | ■ Under voltage electric energy storage device (<0.85Us)<br>■ Energy storage motor fault | ☐ Provide a greater than 0.85 Us check voltage circuit of electric energy storage mechanism; Such as the voltage is normal, wiring is normal also, contact our company maintenance. |
| 6 | Can't insert the handle to exit or insert the body | ■ Install the padlock of the "separation" position<br>■ Contact strips or body not completely pushed to the "separation" position | ☐ According to the controller of the fault type and fault current, check out the fault lines, press the red reset button, and then the circuit breaker closing |
| 7 | Can't take out contact strips or body on the drawer | ■ Handle in the insert position<br>■ Circuit breaker is not fully return to the separation position | ☐ Check the line<br>☐ Replace the damaged trip<br>☐ Contact our company maintenance |
| 8 | Can't open circuit breaker remote<br>(press the opening button on the swithch body can be open) | ■ Shunt release of the power supply voltage is too low (<0.7Us)<br>■ Shunt release cricuit fault<br>■ Shunt release fault | ☐ Check the power supply voltage is normal<br>☐Check whether the line is correct<br>☐The first two under the condition of normal, may be a component failure, contact our company maintenance |
| 9 | Can't close circuit breaker at the scene | ■ Machinery fault occurs or main circuit Welding | ☐ Contact our company maintenance |
| 10 | Can't close circuit breaker remote or the scene | ■ Fault tripping indicator not reset<br>■ Circuit breaker is not fully in the connection position<br>■ To prevent a close lock is locked in the "off" position<br>■ Circuit breaker have interlocking | ☐ After they check out fault reset button reset<br>☐ The circuit breaker plug to connect position completely<br>☐ Unlock closed to prevent<br>☐ Cancel the interlocking |

# Ordering Notes

| Please fill in numbers in_____, and check ✓ in ☐ | | | |
|---|---|---|---|
| User:<br>Number of units ordered:<br>Date of ordering: | | | |
| Basic parameters | Shell frame level | ☐ VW3-2000 ☐ VW3-2500 ☐ VW3-4000 ☐ VW3-6300 | |
| | Installation mode | ☐ F-Fixed type ☐ D-Drawout type | |
| | Rated current (A) | VW3-2000 | ☐ 200 ☐ 400 ☐ 630 ☐ 800 ☐ 1000 ☐ 1250 ☐ 1600 ☐ 2000 |
| | | VW3-2500 | ☐ 630 ☐ 800 ☐ 1000 ☐ 1250 ☐ 1600 ☐ 2000 ☐ 2500 |
| | | VW3-4000 | ☐ 1000 ☐ 1250 ☐ 1600 ☐ 2000 ☐ 2500 ☐ 2900 ☐ 3200 ☐ 3600 ☐ 4000 |
| | | VW3-6300 | ☐ 4000 ☐ 5000 ☐ 6300 |
| | Breaking type | ☐ S-standard breaking (AC400/415V) ☐ S-standard breaking (AC500/550V)<br>☐ S-standard breaking (AC660/690V) ☐ H-high breaking (AC400/415V)<br>☐ H-high breaking (AC500/550V) ☐ H-high breaking (AC660/690V)<br>☐ HU-High voltage breaking(AC800V) ☐ HU-High voltage breaking(AC1140V)<br>☐ HV-Ultra high voltage breaking(AC1250V) ☐ HV-Ultra high voltage breaking(AC1500V)<br>Note: 1. HU-AC1250V only for VW3-4000; 2. S - only for VW3-20; | |
| | Number of poles | ☐ 3-3P ☐ 4-4P ☐ 5-3P+N | |
| | Wiring mode | **VW3-2000(S/H):** ☐ C11-Standard Horizontal Wiring ☐ C21-Standard Vertical Wiring<br>C41-Standard Mixed Wiring (Upper Horizontal, Lower Vertical)<br>C51-Standard Mixed Wiring (Upper Vertical, Lower Horizontal)<br>**VW3-2500(H/HU/HV):** ☐ C11-Standard Horizontal Wiring ☐ C12-Extended Horizontal Wiring<br>**VW3-4000(H, 1000-3200A):** ☐ C11-Standard Horizontal Wiring ☐ C12-Extended Horizontal Wiring<br>☐ C21-Standard Vertical Wiring ☐ C22-Extended Vertical Wiring ☐ C31-Standard Forward Wiring<br>☐ C41-Standard Mixed Wiring (Upper Horizontal, Lower Vertical)<br>☐ C42-Extended Mixed Wiring (Upper Horizontal, Lower Vertical)<br>☐ C51-Standard Mixed Wiring (Upper Vertical, Lower Horizontal)<br>☐ C52-Extended Mixed Wiring (Upper Vertical, Lower Horizontal)<br>☐ C61-Standard Mixed Wiring (Upper Forward, Lower Horizontal)<br>☐ C71-Standard Mixed Wiring (Upper Horizontal, Lower Forward)<br>☐ C81-Standard Mixed Wiring (Upper Vertical, Lower Forward)<br>☐ C91-Standard Mixed Wiring (Upper Forward, Lower Vertical)<br>**VW3-4000(HU/HV, 1000-3200A):** ☐ C11-Standard Horizontal Wiring<br>☐ C12-Extended Horizontal Wiring ☐ C21-Standard Vertical Wiring<br>**VW3-4000(H/HU/HV, 3600-4000A):** ☐ C12-Extended Horizontal Wiring ☐ C22-Extended Vertical Wiring<br>**VW3-6300(H/HU/HV, 4000-5000A):** ☐ C11-Standard Horizontal Wiring<br>**VW3-6300(H/HU/HV, 6300A):** ☐ C12-Extended Horizontal Wiring | |
| Controller parameters | Controller model | ☐ VWC2 (DIP switch) ☐ VWC4 (digital screen) ☐ VWC6 (LCD)<br>Note: VWC2 is only used for VW3-20 | |
| | Protection type | ☐ Conventional type (standard configuration) ☐ V-Voltage measurement and protection type<br>☐ P-Harmonic measurement and protection type | |
| | Communication function | ☐ H-Modbus protocol ☐ MP-Profibus-DP protocol ☐ MD-Devicenet protocol<br>Note: Only VWC6 have communication function | |
| | Signal unit | ☐ S1-4DO ☐ S2-3DO+1DI ☐ S3-2DO+2DI<br>Note: VWC4 only S1-4DO | |
| | Remote reset | ☐ Z2-AC230V Note: VWC2 does not have remote reset function | |
| | External transformer | 3P+N required: ☐ N1 ☐ N2 ☐ N3 ☐ N4 | ☐ E |
| | Grounding mode | ☐ T(default) ☐ W | ☐ E |
| | Contact wear equivalent | ☐ J | |
| Required accessories | Electric operating mechanism | ☐ D1-AC400V ☐ D2-AC230V/DC220V ☐ D4-AC/DC110V ☐ D5-DC24V | |

# Ordering Notes

| | | | |
|---|---|---|---|
| Required accessories | Shunt release | ☐ F1-AC400V ☐ F2-AC230V/DC220V ☐ F4-AC/DC110V ☐ F5-DC24V | |
| | Closed electromagnet | ☐ B1-AC400V ☐ B2-AC230V/DC220V ☐ B4-AC/DC110V ☐ B5-DC24V | |
| Optional accessories | Under-voltage release | Voltage specifications | ☐ Q1-AC400V ☐ Q2-AC230V ☐ Q5-DC24V |
| | | Delay time | ☐ 0-Instantaneous ☐ 1-1s delay ☐ 3-3s delay ☐ 5-5s delay |
| | Loss of voltage release | Voltage specifications | ☐ S1-AC400V ☐ S2-AC230V |
| | | Delay time | ☐ 0-Instantaneous ☐ 1-1s delay ☐ 3-3s delay ☐ 5-5s delay |
| Optional accessories | Voltage-check closing device | ☐ J1-AC400V ☐ J2-AC230V | |
| | Auxiliary contact | ☐ A33-3NO3NC ☐ A44-4NO4NC ☐ A55-5NO5NC ☐ A66-6NO6NC<br>☐ _____NO_____NC (Max. 14) | |
| | | ☐ A3-Three-group switching ☐ A4-Four-group switching ☐ A5-Five-group switching<br>☐ A6-Six-group switching ☐ _____-group switching (Max. 14) | |
| | Closing ready | ☐ BX-Closing ready signal output unit | |
| | Counter | ☐ JS-Counter | |
| | Drawer seat door interlock | ☐ CM1-Drawout type (with the right side of the door interlock) | |
| | Door frame | ☐ M-Door frame<br>Note: standard | |
| | Position indicator | ☐ CX-Drawer seat three-position signal output | |
| | Relay module | ☐ R-Relay module | |
| | Power supply | ☐ AC65~500V, DC80~700V Note: standard | |
| | Button lock | ☐ S-Button lock | |
| | Voltage conversion module | ☐ P2-Voltage conversion module | |
| Language type | | ☐ Chinese ☐ Y-English | |
| Interlocking accessories | Off-position lock | ☐ SF11-Key lock device (one lock and one key) ☐ SF21-Key lock device (two locks and one key)<br>☐ SF31-Key lock device (three locks and one key) ☐ SF32-Key lock device (three locks and two keys)<br>☐ SF53-Key lock device (five locks and three keys) | |
| | Mechanical interlocking | Cable type | ☐ SR11-Mechanical interlocking device (two sets of steel cables, one for closing and one for opening)<br>☐ SR12-Mechanical interlocking device (three sets of steel cables, one for closing and two for opening)<br>☐ SR21-Mechanical interlocking device (three sets of steel cables, two for closing and one for opening) |
| | | Hard rod type | ☐ SY11-Mechanical interlocking device (two sets of hard rods, one for closing and one for opening) |
| Special requirements | | Overload and long-time delay current $I_r$=_____A | Overload and long-time delay time $t_r$=_____s |
| | | Short-circuit short-time delay current $I_{sd}$=_____A | Short-circuit short-time delay time $t_{sd}$=_____s |
| | | Short circuit instantaneous current $I_i$=_____A | |
| | | Grounding fault current $I_g$=_____A | Grounding fault time $t_g$=_____s |
| | | Current imbalance percentage δ=_____% | Current imbalance action time δ=_____s |
| | | Current leakage setting value $I_{\triangle n}$_____A | Current leakage action time $t_{\triangle n}$_____s |
| | | Load monitoring1 current setting value $I_{c1}$_____A | Inverse time-limit time $t_{c1}$_____s |
| | | Load monitoring2 currentI setting value $I_{c2}$_____A | Fixed time-limit $t_{c2}$_____s |
| Other requirements | | | |